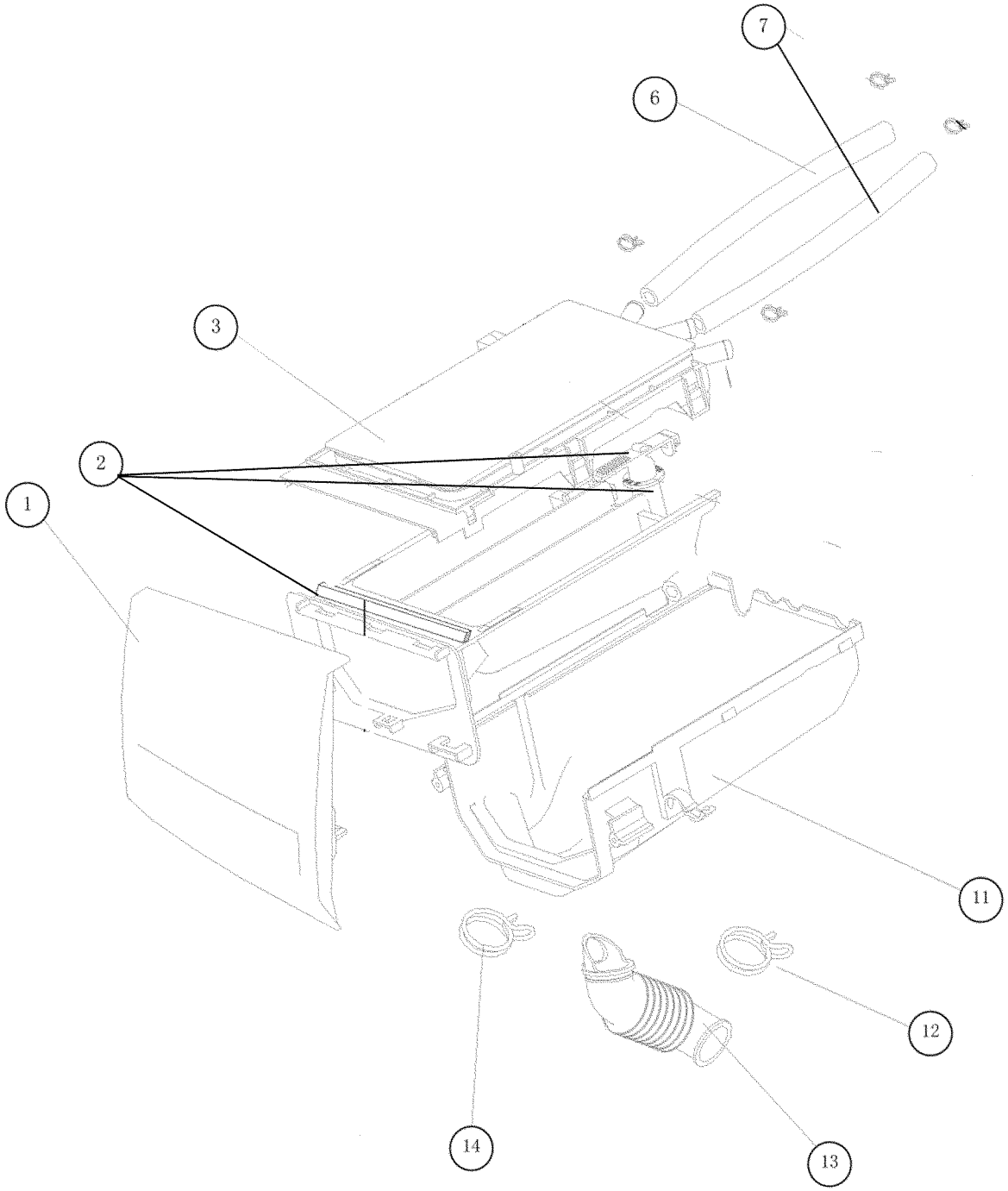

P09143053469a