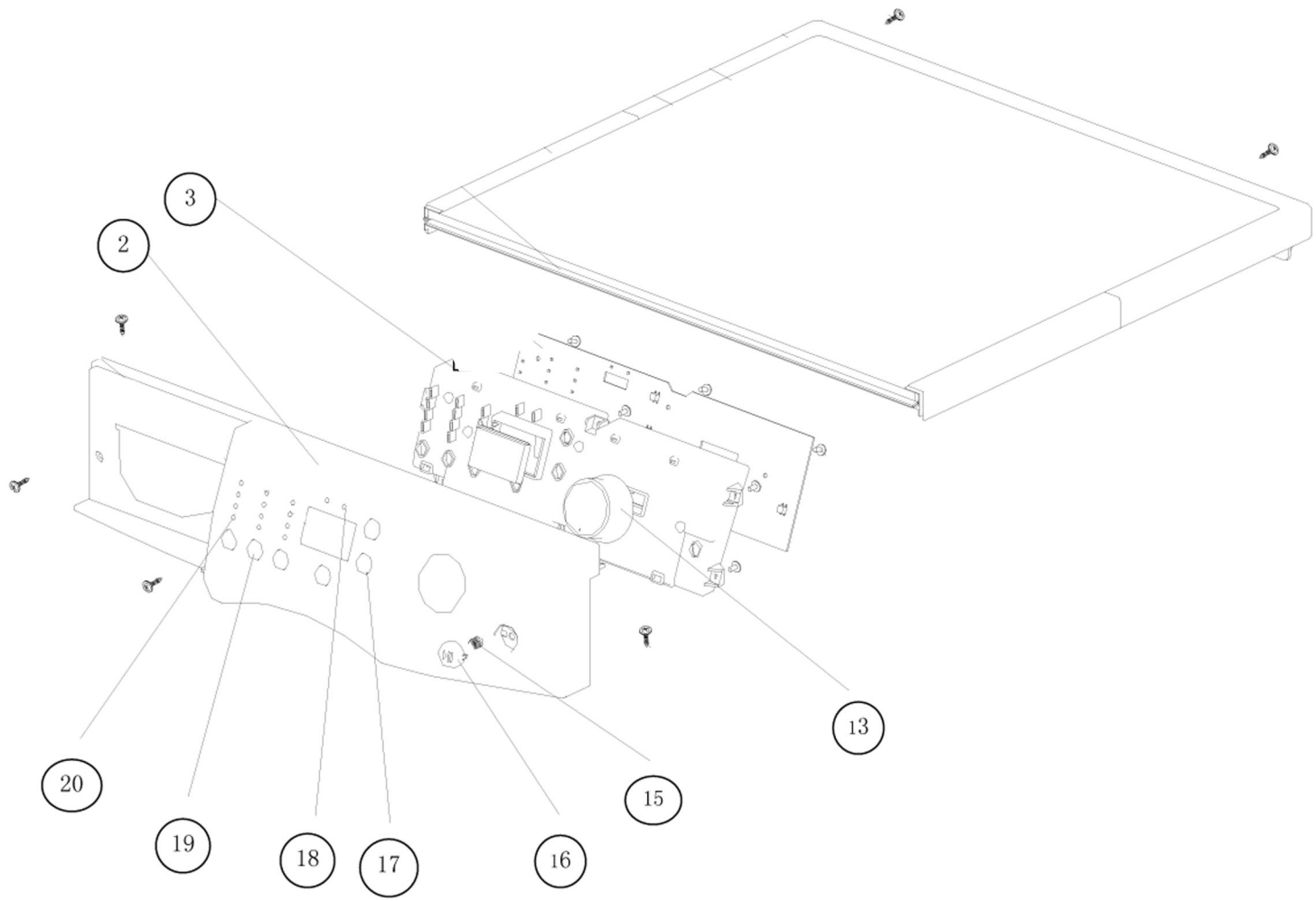

P09143053468