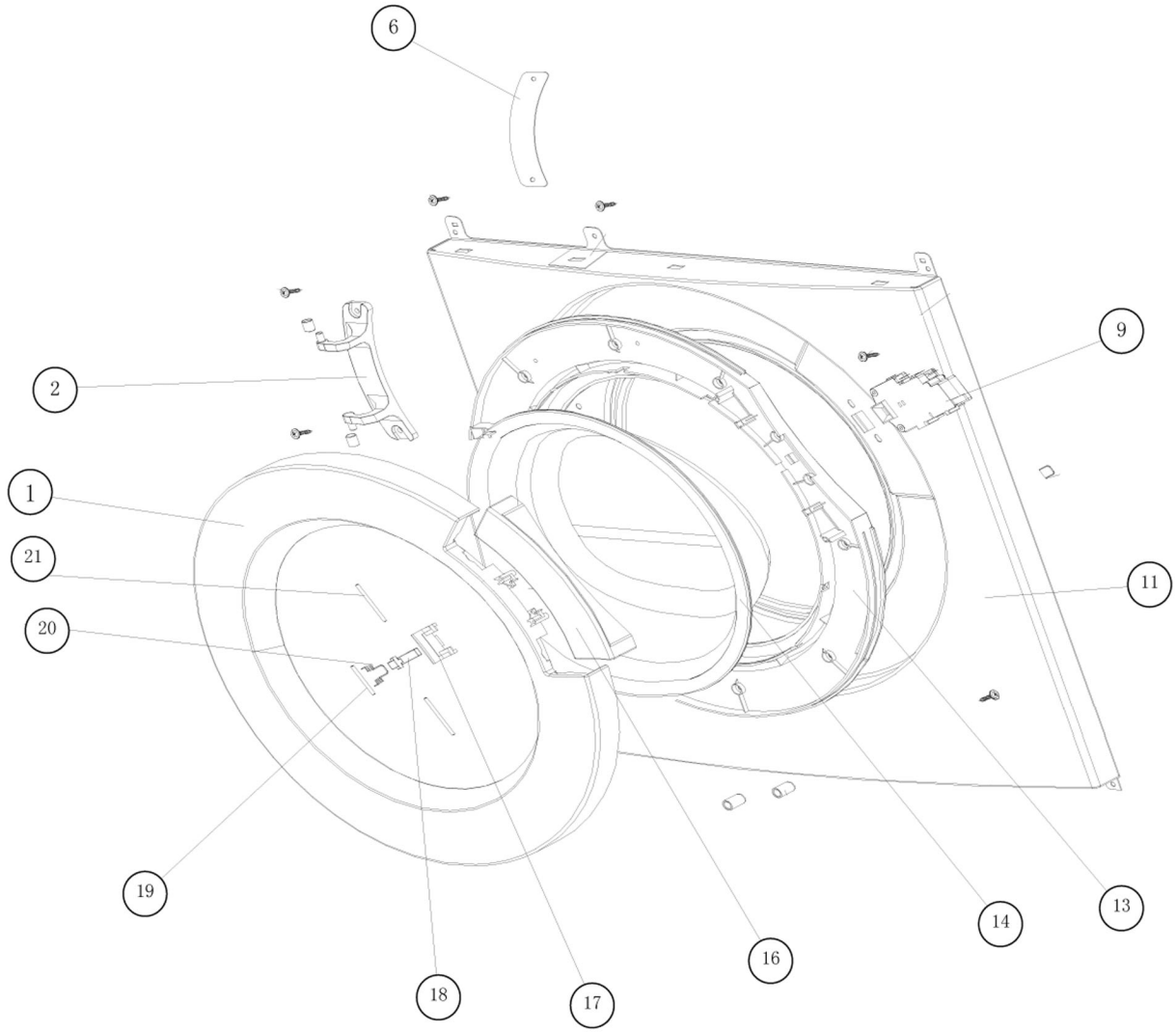

P09143053470