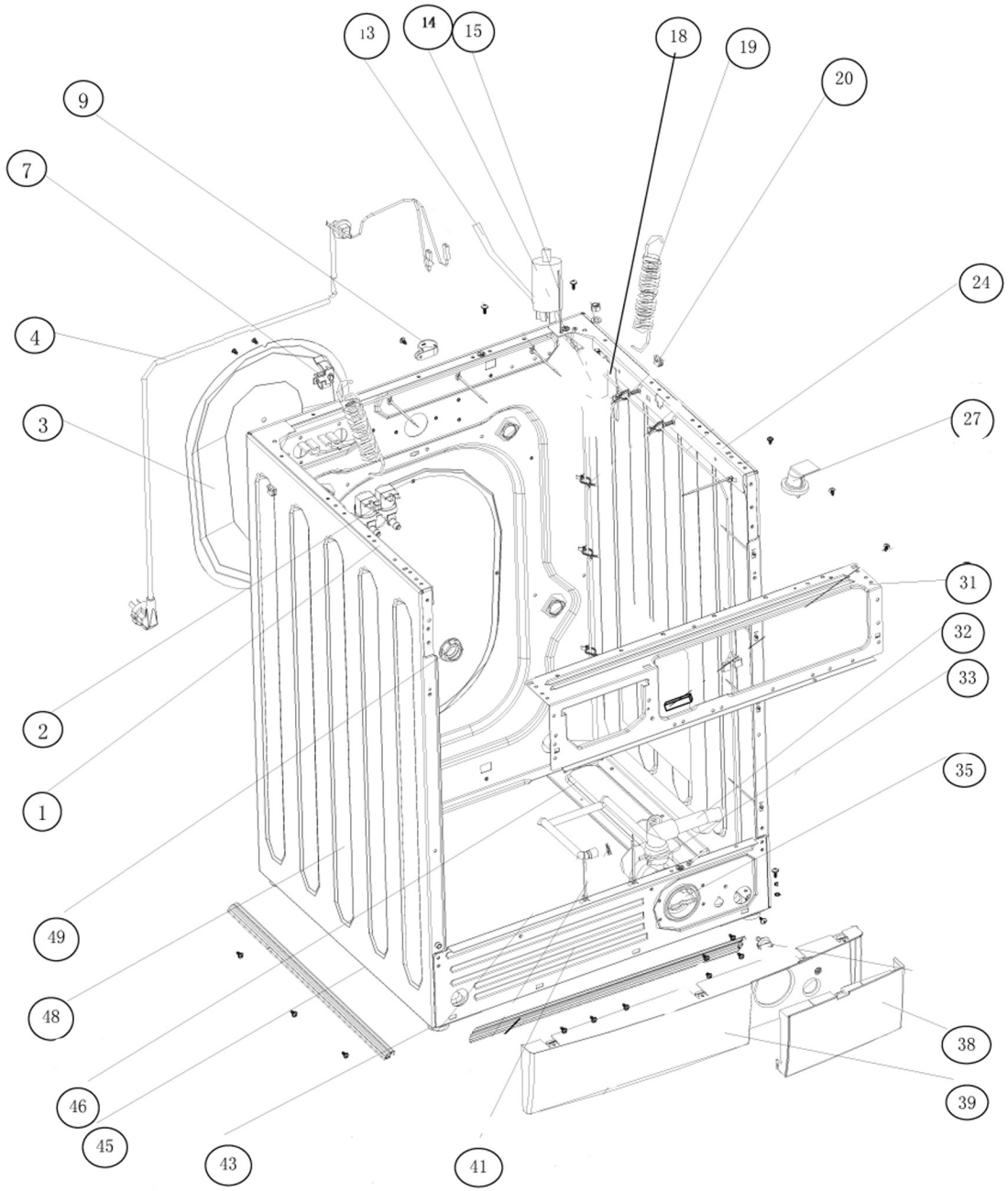

P09143053447