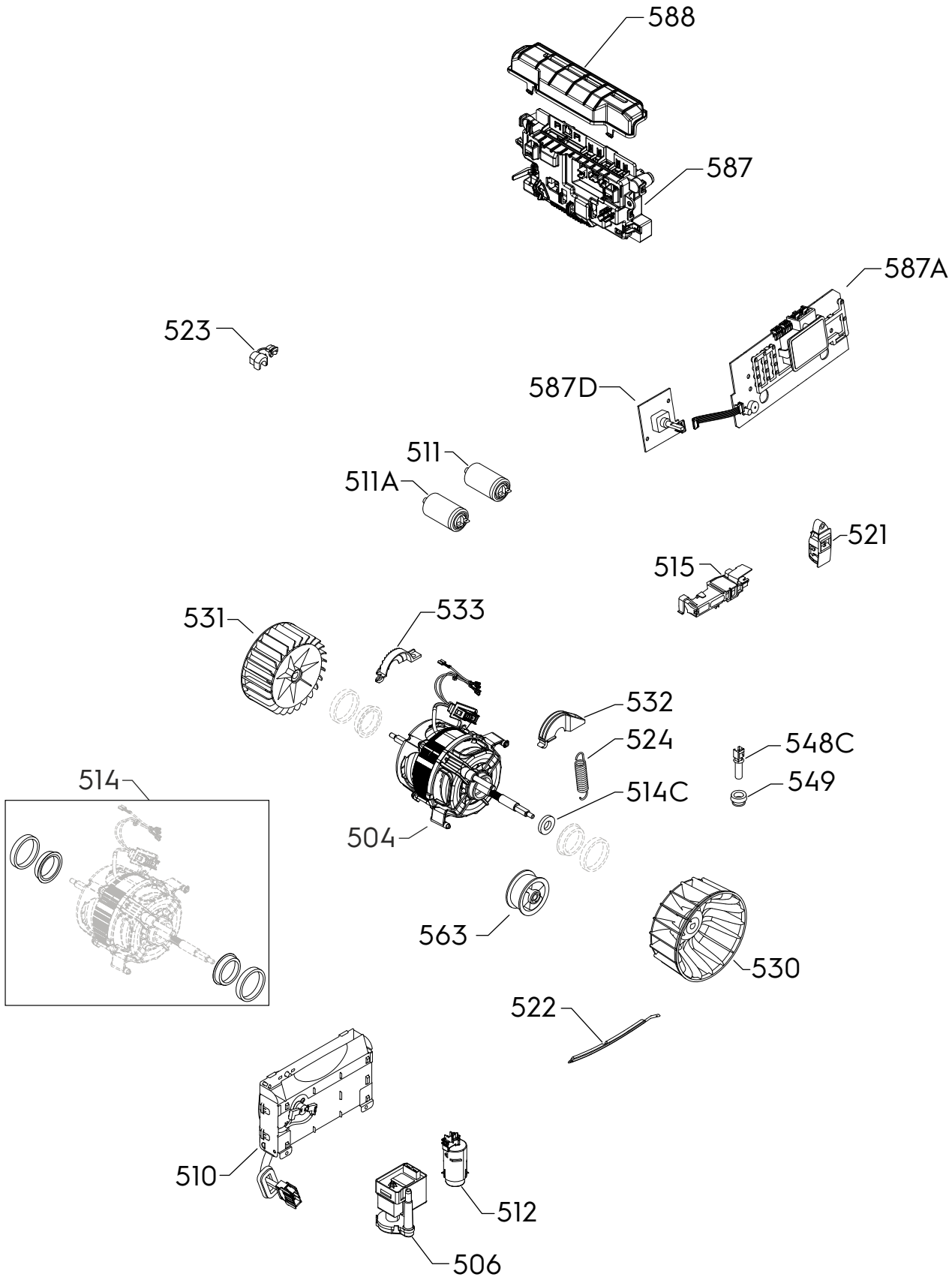

P09163088086