1.MAIN

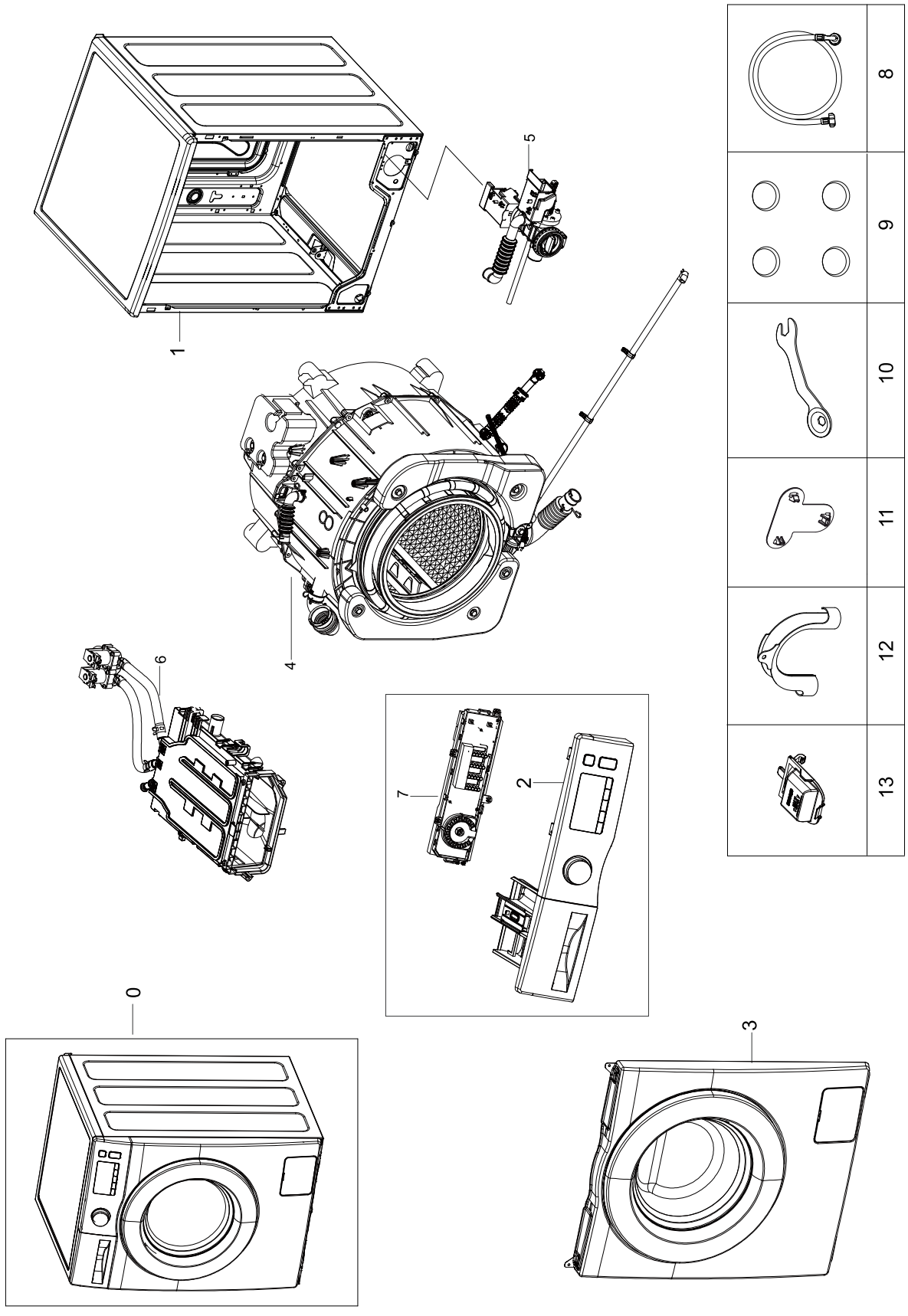

2.FRAME & COVER PARTS

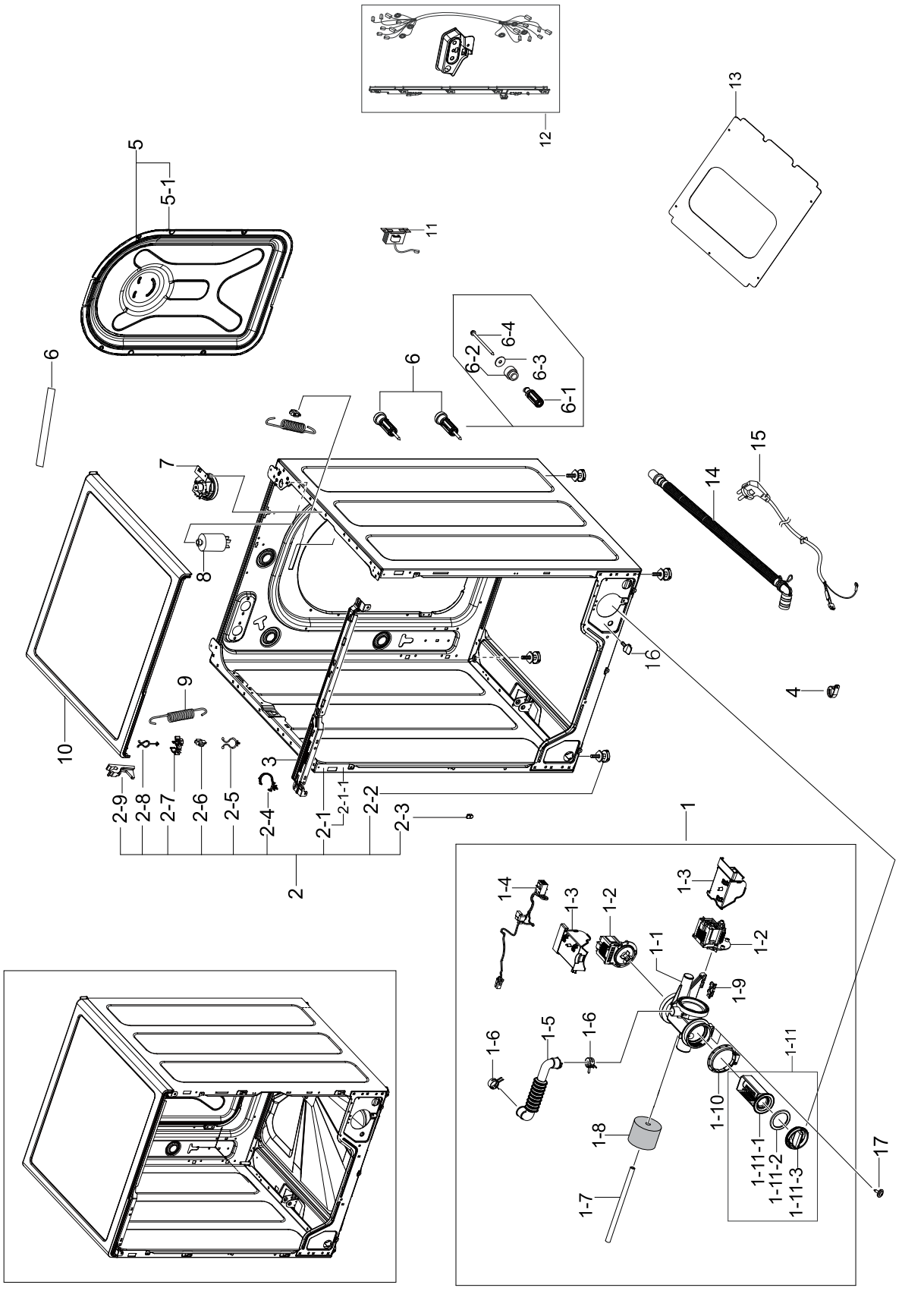

3.ASS'Y TUB DRUM

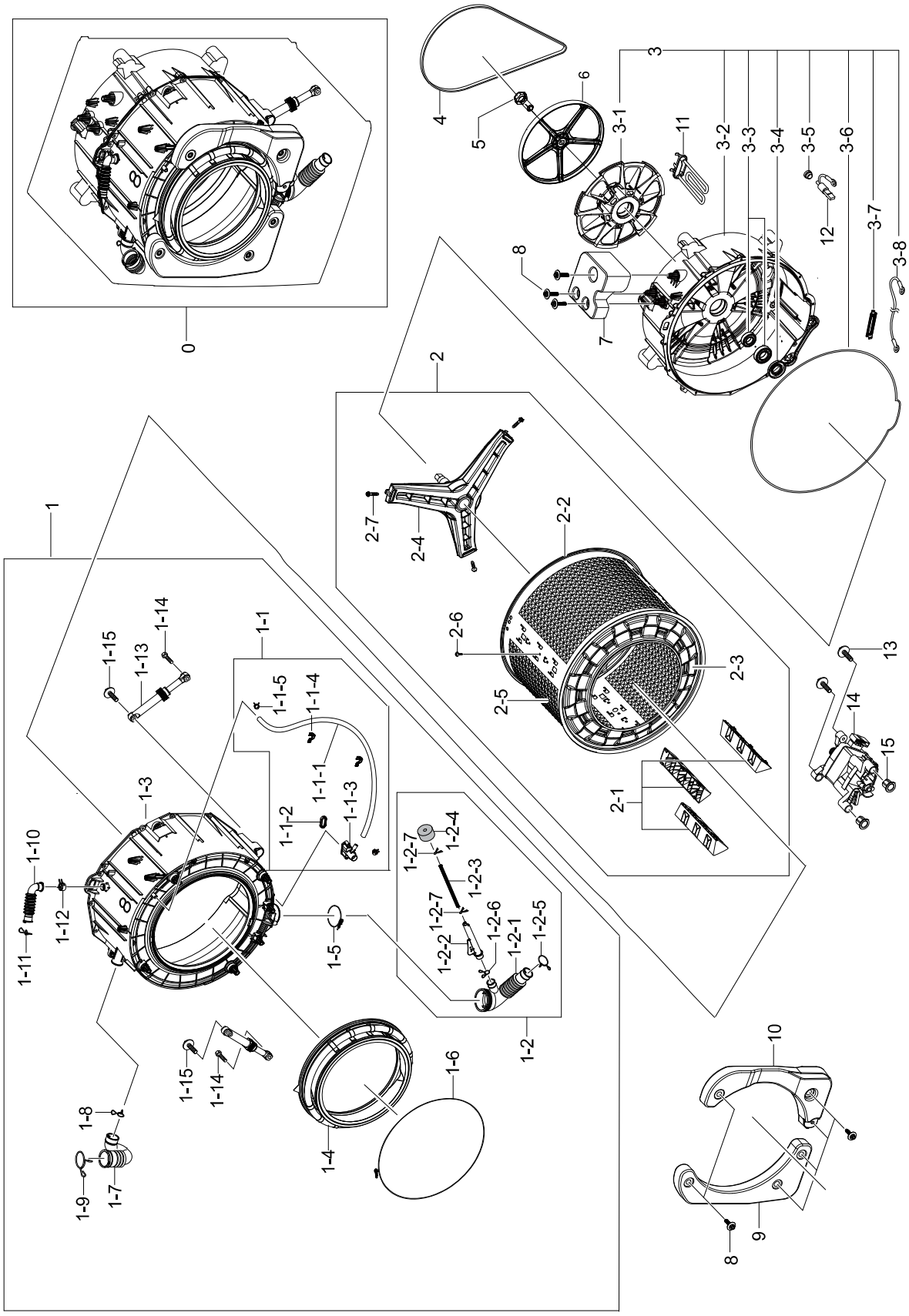

4.ASS'Y FRAME FRONT

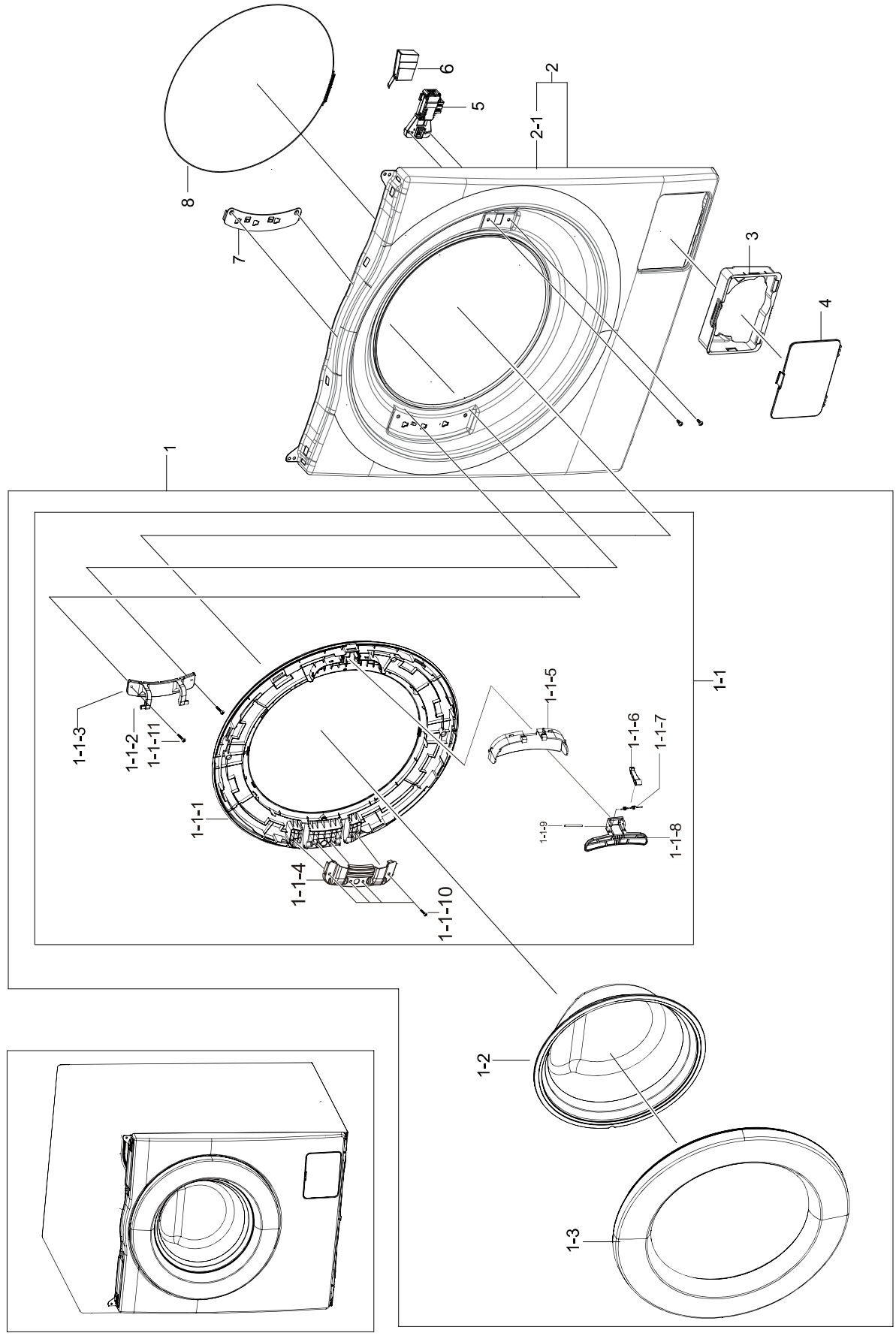

5.PANEL-CONTROL & DRAWER

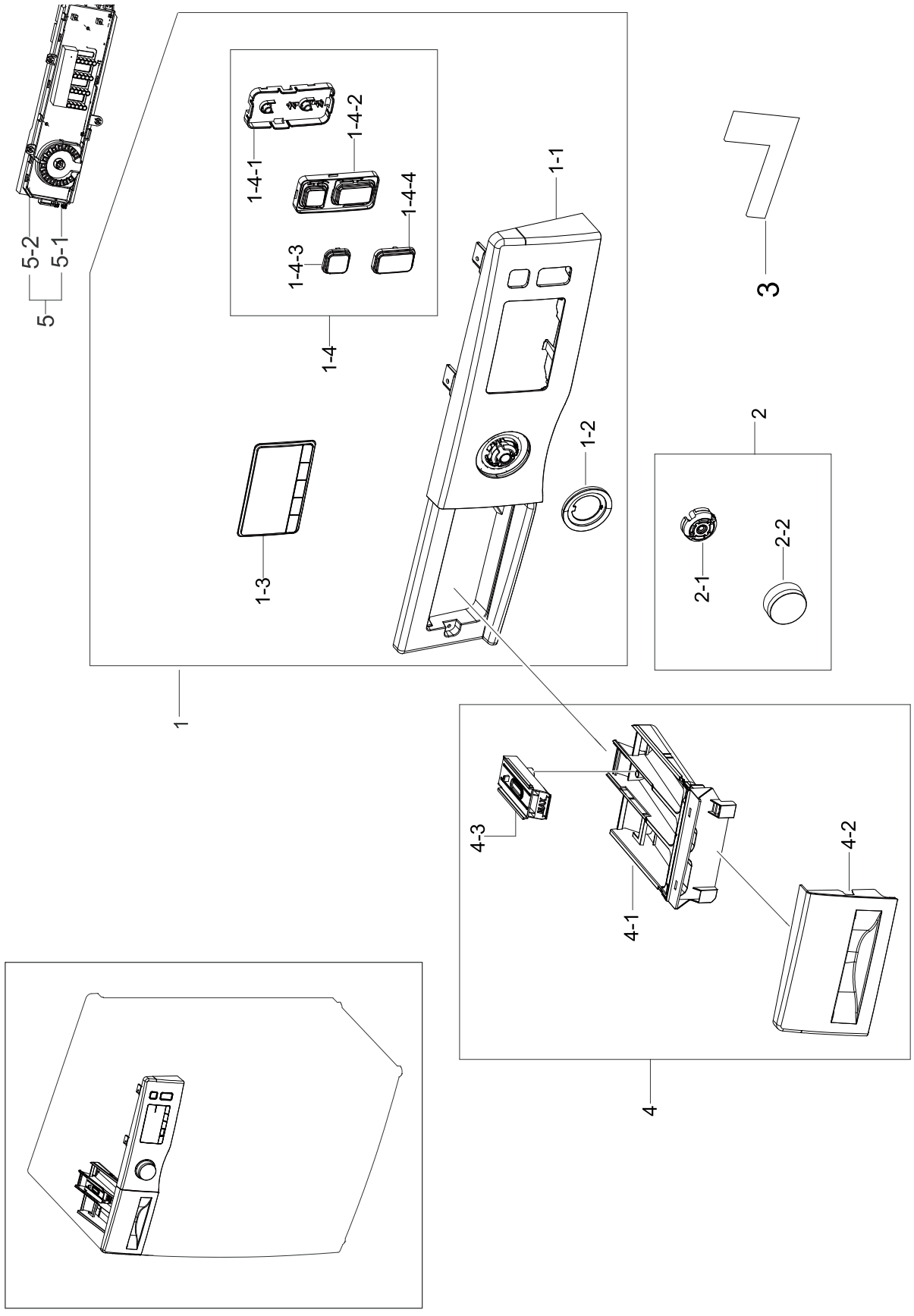

6.ASS'Y HOUSING DRAWER

