1. Main

Exploded View

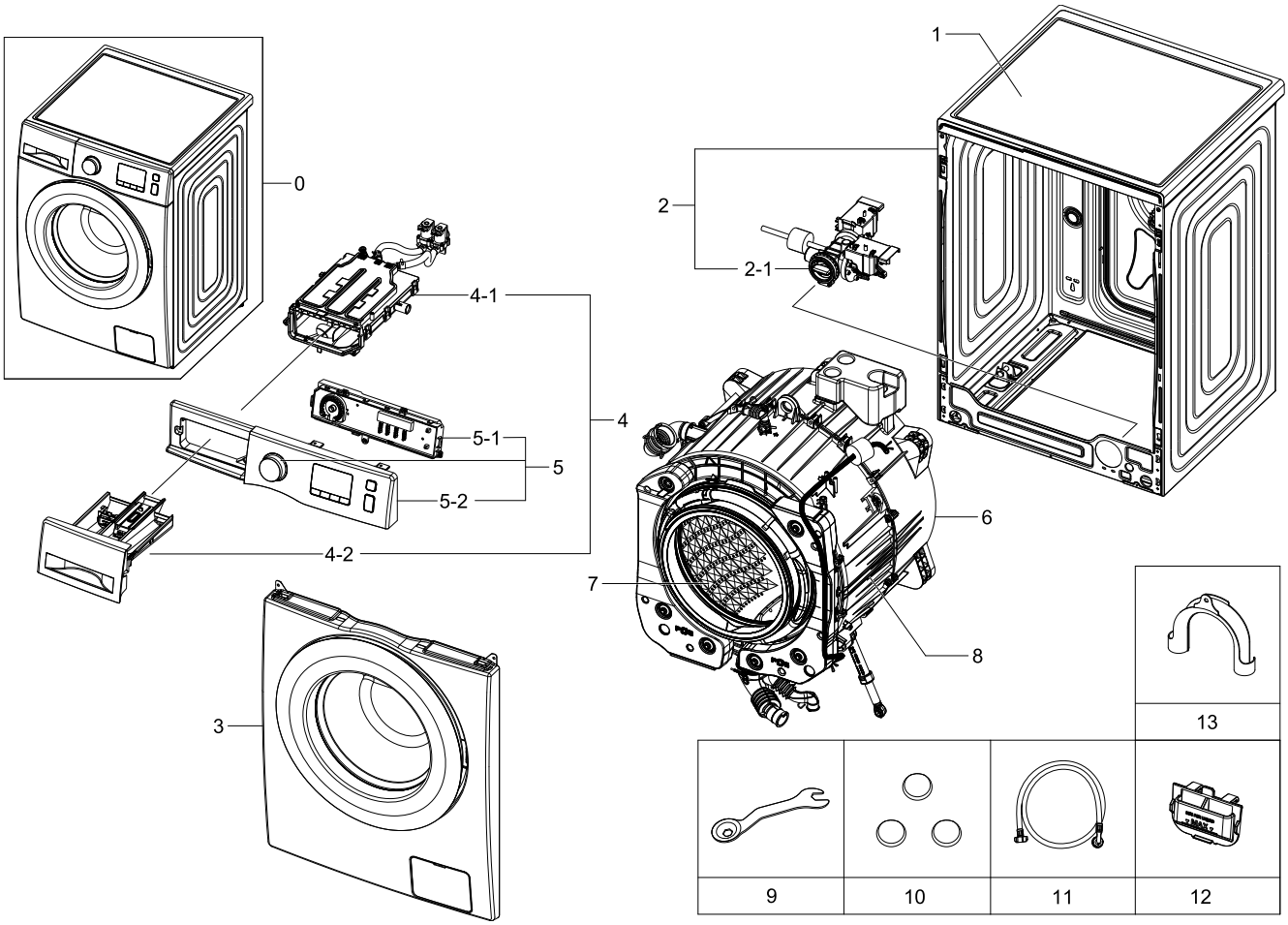

Parts List

No.	Lvl.	Loc.	Material Code	Description & Specification	SNA	Qty.
1	1	W0183	DC90-12931A	ASSY COVER TOP; F500,UNI,WHT	SNA	1
2	1	W0506	DC90-12949A	ASSY FRAME; F500,UNI,NON L/S	SNA	1
2-1	2	W0194	DC97-17336A	ASSY PUMP DRAIN; F500E,WF80F5E5U4W/EF,AL-	SA	1
3	1		DC90-12807A	ASSY FRONT; WHITE,WHITE,F500	SNA	1
4	1	W0216	DC90-12798A	ASSY DRAWER; F500,UNI,WHT,COLD	SNA	1
4-1	2	W0163	DC97-17311A	ASSY HOUSING DRAWER; F500E,WF80F50FU4W,PP	SA	1
4-2	2	W0216	DC97-17310B	ASSY DRAWER; F500E,WF80F50FU4W	SA	1
5	1	W0478	DC90-12865A	ASSY PANEL CONTROL; F500,WF80F5E0W4W/LE	SNA	1
5-1	2		DC92-01690E	ASSY KIT; FWM_UNI,F500E,8KG, 1400RPM, BET	SA	1
5-2	2	W0478	DC97-17404J	ASSY PANEL CONTROL; WF80F5E0W4W/LE,ICON+E	SNA	1

Copyright© 1995-2013 SAMSUNG. All rights reserved.

No.	Lvl.	Loc.	Material Code	Description & Specification	SNA	Qty.
6	1	W0501	DC90-12811A	ASSY TUB BACK; F500,CERAMIC	SNA	1
7	1	W0165	DC90-12363A	ASSY DRUM; F500E,WF80F5E5U4W/EF	SNA	1
8	1	G0048	DC90-12369A	ASSY TUB FRONT; F500E,WF80F5E5U4W/EF	SNA	1
9	2	WJ5077	DC60-40146A	BOLT SPANER; CR,T2.5	SA	1
10	2	W0614	DC67-00307A	CAP-FIXER; WF438AAC/XAA,PP,T1.5,RECYCLE,B	SC	3
11	2	W0757	DC97-17845A	ASSY HOSE WATER; COLD,ALL MODEL	SA	1
12	2		DC61-03510A	GUIDE LIQUID; WF-F500E,PP,MT43,Honesty Bl	SA	1
13	2	W0626	DC67-00357A	HOSE-HANGER; SEM,PP,ID24.13,-,T2.0,-,GRY,	SNA	1

Copyright© 1995-2013 SAMSUNG. All rights reserved.

2. Assy Frame&Cover Parts

Exploded View

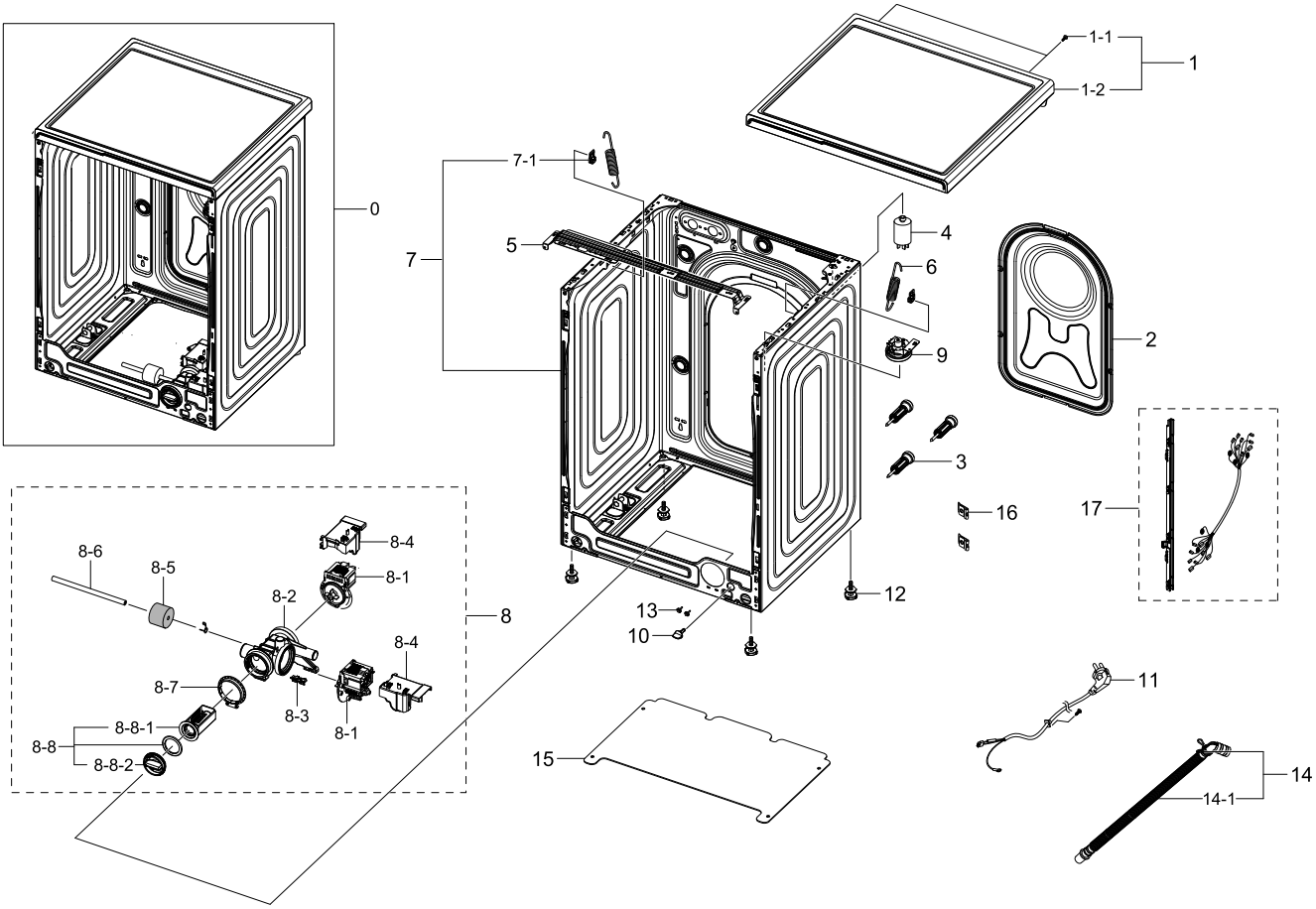

Parts List

No.	Lvl.	Loc.	Material Code	Description & Specification	SNA	Qty.
1	1	W0183	DC90-12931A	ASSY COVER TOP; F500,UNI,WHT	SNA	1
1-1	2	G0425	6009-001476	SCREW-HEX; HEX,+,M5,L10,Ni-Zn(WHT),SWRCH1	SA	2
1-2	2	W0183	DC97-17254C	ASSY COVER TOP; F500E,WHITE	SA	1
2	2		DC63-01034C	COVER BACK; GI-SGCC,T0.25, embo	SA	1
3	2	W0603	DC97-14653C	ASSY FIXER TUB; SCOUT,WF0804Y8E/XEF	SA	3
4	2	W0620	DC29-00005A	FILTER EMI; VDE,1.2mH MIN/1/-,38*81*PI38,	SC	1
5	2	W0248	DC61-03467A	FRAME PLATE-UP; WF-F500E,GI-SGCC,-,-,T1.0	SNA	1
6	2	W0630	DC61-02146B	SPRING ETC-HANGER; F500E PJT,HSWR,CD3.5,O	SA	2
7	2	W0506	DC97-17325E	ASSY FRAME; F500E,DA WHITE,COLD,UNI	SA	1
7-1	3	WI0266	DC61-02065A	GUIDE SPRING; WF448AAG/XXA,POM,T4,W24,L36	SA	2
8	2	W0194	DC97-17336A	ASSY PUMP DRAIN; F500E,WF80F5E5U4W/EF,AL-	SA	1

Copyright© 1995-2013 SAMSUNG. All rights reserved.

No.	Lvl.	Loc.	Material Code	Description & Specification	SNA	Qty.
8-1	3	M0022	DC31-00030H	PUMP-DRAIN; 220V-240V,50Hz,30W,18L/min	SA	2
8-2	3	W0479	DC61-02271B	CASE PUMP; WF0804Y8E/XEF,PP,T2.5,W153.6,L	SA	1
8-3	3	WO0031	DC63-00905A	CUSHION PUMP; WF8802DPF/XET,NBR,-,W37.6,L	SA	1
8-4	3	W0213	DC63-01549A	COVER PUMP; F500,PP,VO GRADE,NATURAL,FH44	SA	2
8-5	4	W0743	DC63-10003C	SPONGE-HOSE AIR; SWF-P12,PUR FOAM,GRY	SA	1
8-6	4	U2015	DC67-00244C	HOSE DRAIN; WF0804Y8E,EPDM,ID6,OD11,T2.5,	SA	1
8-7	3		DC69-01128A	PACKING-PUMP; WF8804DP,IIR,BUTYL,T2.5,HEB	SA	1
8-8	3	G0050	DC97-15695A	ASSY FILTER; GRIFFIN-PJT,WF9804RWE,PP+EPD	SA	1
8-8-1	5	W0633	DC63-00998A	FILTER PUMP; SCOUT-PJT,PP,-,NEAT WHITE,BU	SA	1
8-8-2	4	WI0357	DC64-01317A	HANDLE FILTER; PP,FC2210,NTR/BLACK	SA	1
9	2	H2050	DC96-01703G	SENSOR PRESSURE; Air,5,-,400mmH20,-	SA	1
10	2	WI0107	DC61-10673A	CAP DRAIN; PP,-,-,CNTK-P-101,INNER GRAY	SA	1
11	2	W0467	DC96-00146H	CBF-POWER CORD; AT,EUROPE,EU3F,Gray,1500,	SA	1
12	2	W0606	DC97-00920U	ASSY LEG; F500E,WF80F5E5U4W/EF,H33.5,P1.5	SA	4
13	2	M0030	DC97-14006A	ASSY SCREW; WF203,-,SCREW-TAPPING,-,M4/L1	SA	2
14	2	W0604	DC97-16240F	ASSY HOSE DRAIN(O); F500E,WF80F5E5U4W	SA	1
14-1	3		DC67-00516D	HOSE DRAIN-O; F500,EPDM,ID17,T1,-	SNA	1
15	2	W0629	DC64-02912A	SHUTTER; F500E,PP,-	SNA	1
16	2		DD61-00140A	BRACKET-TAPPING; SDW-T120B,SK5,T0.6,BLK,C	SNA	2
17	2	W0080	DC93-00353C	ASSY M.GUIDE WIRE HARNESS; DRUM	SA	1

Copyright© 1995-2013 SAMSUNG. All rights reserved.

3. Assy Tub&Drum

Exploded View

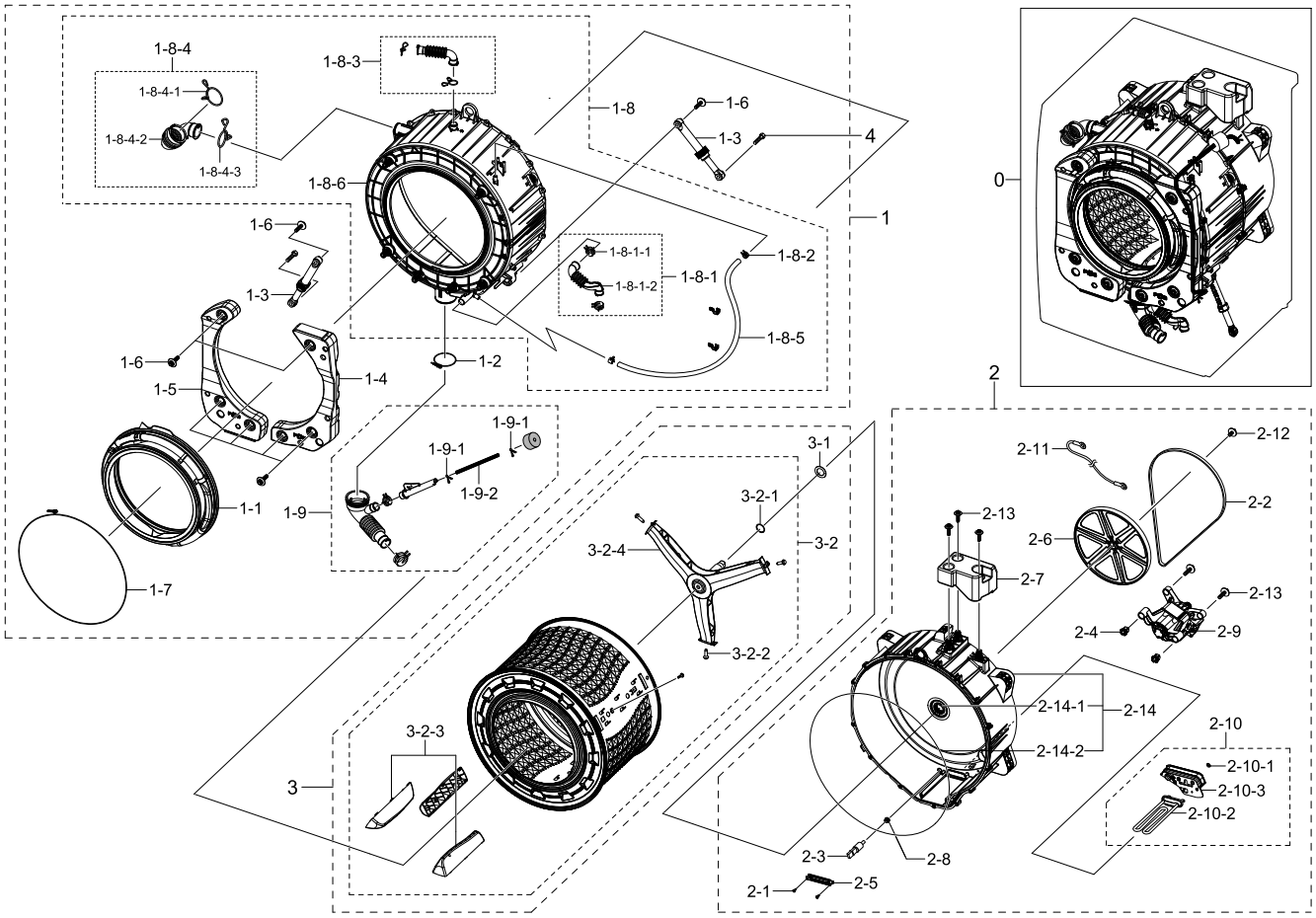

Parts List

No.	Lvl.	Loc.	Material Code	Description & Specification	SNA	Qty.
1	1	G0048	DC90-12369A	ASSY TUB FRONT; F500E,WF80F5E5U4W/EF	SNA	1
1-1	2	W0234	DC64-02888A	DOOR DIAPHRAGM; WF80F5E5U4W,TPE,T2.4,H80.	SA	1
1-2	2	W0744	DC65-00021A	CLAMPER HOSE-JOINT; HEBA PJT,HSWR-SWRH,ID	SA	1
1-3	2	W0618	DC66-00531C	DAMPER SHOCK; HEBA,STEEL+PP+RUBBER,80N,W2	SA	2
1-4	2	W0232	DC67-00681A	WEIGHT BALANCER-RIGHT; F500,CONCRETE,NATU	SA	1
1-5	2	W0233	DC67-00682A	WEIGHT BALANCER-LEFT; F500,CONCRETE,NATUR	SA	1
1-6	2	W0601	DC97-14263A	ASSY BOLT; MOTOR/BOLT(M8)+WASHER(OD27.5),	SA	8
1-7	2	M0038	DC97-14618A	ASSY CLAMP DIAPHRAGM; WF8804DP,OD2.0/L124	SA	1

Copyright© 1995-2013 SAMSUNG. All rights reserved.

No.	Lvl.	Loc.	Material Code	Description & Specification	SNA	Qty.
1-8	2	W0636	DC97-17327A	ASSY SEMI TUB FRONT; F500E,WF80F5E5U4W/EF	SNA	1
1-8-1	3		DC97-17339A	ASSY HOSE AIR-TUB; F500E,WF80F5E5U4W/EF,B	SA	1
1-8-1-1	4	W0615	DC61-00158A	CLAMPER HOSE; SW65ASP,SK5,ID23,T0.8,-	SA	2
1-8-1-2	4	G0053	DC67-00671A	HOSE AIR TUB; F500,EPDM,19.3,29,T2.5,50,B	SA	1
1-8-2	3	W0615	DC65-00008A	CLAMPER HOSE; SEW-DR605,SK5,-,ID14.2/T0.9	SA	4
1-8-3	3	G0422	DC97-14873C	ASSY HOSE AIR; F500,WF80F5E5U4W	SA	1
1-8-4	3	G0043	DC97-14874C	ASSY HOSE DRAWER; HEBA BIGBANG,WF0800NCE,	SA	1
1-8-4-1	4	WJ0027	DC72-00001G	CLIP RING; HEBA-PJT,HSWR-SWRH,T3.0,ID49.5	SA	1
1-8-4-2	4	WH5191	DC67-00422A	HOSE DRAWER TUB; HEBA-PJT,EPDM,BLK	SNA	1
1-8-4-3	4	W0610	DC65-60118R	CLIP RING; AEGIS-PJT,HSWR-SWRH,T3.0,ID37	SA	1
1-8-5	3	G0052	DC67-00471E	HOSE CIRCULATION; F500E,EPDM,ID9.0,BLK	SA	1
1-8-6	3	W0632	DC61-03453A	TUB FRONT; F500,FRPP,OD 546.1,NTR,BUBBLE	SA	1
1-9	2	W0605	DC97-17330A	ASSY HOSE PRESSURE; F500E,WF80F5E5U4W/EF	SA	1
1-9-1	3	WP0165	DC61-70029C	CLIP RING; SEW-HW125,HSWR,WHITE	SA	2
1-9-2	3	W0725	DC67-00230E	HOSE WATER; WD8704,TPE,ID4.5	SA	1
2	1	W0501	DC90-12811A	ASSY TUB BACK; F500,CERAMIC	SNA	1
2-1	2	W0105	6002-000473	SCREW-TAPPING; TH,+,NO,1,M4,L14,PASS,STS3	SA	2
2-2	2	W0209	6602-001497	BELT-TIMING GEAR; RUBBER(GATES),T3.2,1270	SA	1
2-3	2	M0487	DC32-00010C	THERMISTOR; WASHER,-10~100,5,5,3.243k	SA	1
2-4	2	WS0064	DC61-02549A	BUSH MOTOR; HEBA BIGBANG,PA66+GF15%,NATUR	SA	2
2-5	2	W0230	DC61-02874A	BRACKET HEATER; WD0704CQR,STAINLESS-STS43	SA	1
2-6	2	W0434	DC66-00767A	PULLEY MOTOR; F500,PA66,-,AF216V60(PA66+G	SA	1
2-7	2	W0231	DC67-00670A	WEIGHT BALANCER-UP; F500,CONCRETE,-,4.0KG	SA	1
2-8	4	M0028	DC69-00824A	PACKING-THERMISTOR; GW-PJT,EPDM,-,-,W17,H	SA	1
2-9	2	W0086	DC31-00123F	MOTOR UNIVERSIAL DRIVE; Welling(UML 5204.	SA	1
2-10	2	G0420	DC93-00355B	ASSY HEATER; 220~240V,SILICON	SNA	1
2-10-1	3	W0110	6031-001531	WASHER-PLAIN; SCP1,ID7,OD14,T1.2,ZPC2,ACE	SA	1
2-10-2	3	W0237	DC47-00033A	HEATER-WASH; AC230V,Double Fuse (167	SC	1

Copyright© 1995-2013 SAMSUNG. All rights reserved.

No.	Lvl.	Loc.	Material Code	Description & Specification	SNA	Qty.
2-10-3	3	W0235	DC63-01553A	COVER HEATER; F500 PJT,ABS+PC,W77,L168.1,	SA	1
2-11	2	W0503	DC96-01327B	ASSY WIRE HARNESS-EARTH; DRUM-M,WF8800BPH	SA	1
2-12	2	W0601	DC97-06080C	ASSY BOLT; BOLT+WASHER(OD38),,,,,,	SA	1
2-13	2	W0601	DC97-14263A	ASSY BOLT; MOTOR/BOLT(M8)+WASHER(OD27.5),	SA	5
2-14	2	W0501	DC97-17334A	ASSY TUB BACK; F500E,WF80F5E5U4W/EF,8.0kg	SA	1
2-14-1	3	WS0119	DC62-00008A	SEAL OIL; NBR,BLACK,-,NBU	SA	1
2-14-2	3	W0740	DC69-01769A	PACKING-TUB; ARNO,EPDM,EPDM,T5.5,L1720,BL	SNA	1
3	1	W0165	DC90-12363A	ASSY DRUM; F500E,WF80F5E5U4W/EF	SNA	1
3-1	2	WS0131	DC60-00069A	SPACER; WR-HA139WA,STS304,ID30.2,SILVER,T	SA	1
3-2	2	W0165	DC97-17231A	ASSY DRUM; F500 PJT	SA	1
3-2-1	3		6044-002157	RING-OG; ID28,OD32.2,T2.1,BLK,NBR	SA	1
3-2-2	3	WJ5081	DC60-40137A	BOLT HEX; MARS-PJT,STS430,M8,P1.25,L30,HE	SA	3
3-2-3	3	W0619	DC66-00759A	DRUM LIFTER; F500 PJT,PP,W52,H45.8,L246,-	SA	3
3-2-4	3	W0164	DC97-17234A	ASSY FLANGE SHAFT; F500 PJT	SA	1
4	2	G0049	DC60-40144A	BOLT HEX; SM10C,L35,ZPC2(YEL),M10,ZPC2(YE	SA	2

Copyright© 1995-2013 SAMSUNG. All rights reserved.

4. Assy Front

Exploded View

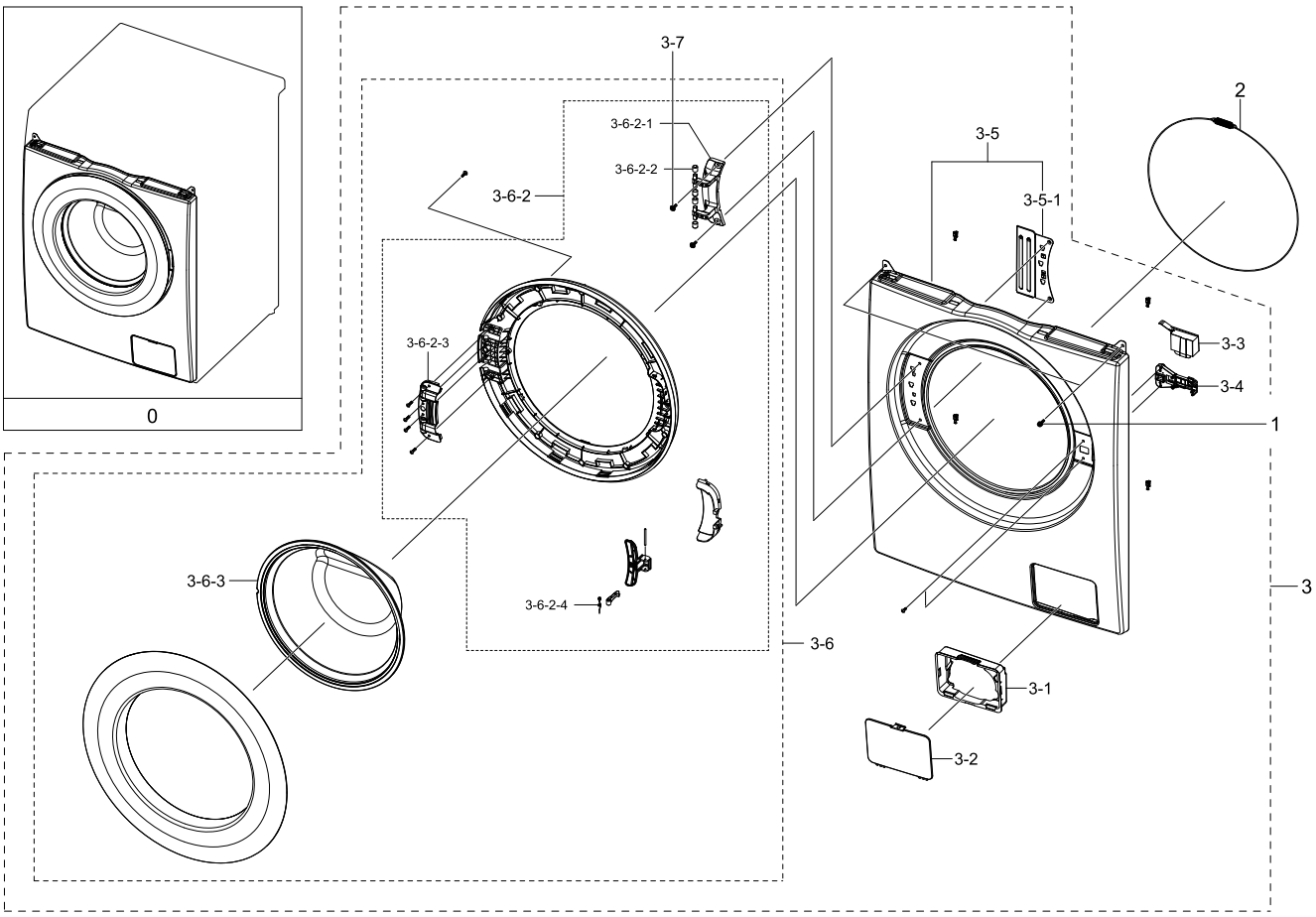

Parts List

No.	Lvl.	Loc.	Material Code	Description & Specification	SNA	Qty.
0	1		DC90-12807A	ASSY FRONT; WHITE,WHITE,F500	SNA	1
1	2	W0105	6002-001438	SCREW-TAPPING; HWH,+,NO,1,M5,L12,ZPC(WHT)	SA	2
2	2	W0608	DC91-12078D	ASSY WIRE DIAPHRAGM; HEBA-PJT,-,-,-,-,-	SA	1
3	2	W0253	DC97-17361C	ASSY FRAME FRONT; F500E	SNA	1
3-1	3	WI0248	DC61-01917A	GUIDE FILTER; WF8804DP,HIPS,T2.5,HB,HG-17	SA	1
3-2	3	W0516	DC63-00920A	COVER-FILTER; WF8500NHW,ABS,T2.5,-,DA WHI	SA	1
3-3	4	WE0059	DC63-00967A	COVER DOOR SWITCH; AEGIS-PJT/ WF8500NHW,P	SA	1
3-4	4	WE0067	DC64-01538A	SWITCH DOOR LOCK; AC250V,16,BIMETAL	SA	1
3-5	3	W0727	DC97-17482A	ASSY FRAME FRONT(S); F500E,DA WHITE	SA	1
3-5-1	4	W0226	DC61-02584A	BRACKET HINGE; GI-SGCC,T1.4,-	SA	1
3-6	3	W0459	DC97-17364C	ASSY DOOR; F500E	SA	1

Copyright© 1995-2013 SAMSUNG. All rights reserved.

No.	Lvl.	Loc.	Material Code	Description & Specification	SNA	Qty.
3-6-2	4	W0454	DC97-17363A	ASSY HOLDER GLASS; F400E	SNA	1
3-6-2-1	6	W0219	DC61-03189A	HINGE DOOR; WF8804DP,PA66,T5.0,Dark Holde	SA	1
3-6-2-2	6	WD0090	DC61-00891A	GUIDE HINGE; HAUZEN(DOM),POM,NTR(WHT),HIN	SA	4
3-6-2-3	5		DC61-01915D	BRACKET HOLDER; GI-SGCC,T1.2,-	SA	1
3-6-2-4	5	WD0130	DC61-02027A	SPRING ETC LEVER; STS304,CD1.2,L10.6	SA	1
3-6-3	4	WD0070	DC64-01521A	DOOR GLASS; WF8804DP,GLASS,T5.0,H120.5,NA	SA	1
3-7	3	G0425	6009-001522	SCREW-HEX; HWH,+,M5,L16,PASS,STS430,FP,SE	SA	2

Copyright© 1995-2013 SAMSUNG. All rights reserved.

5. Assy Panel Control

Exploded View

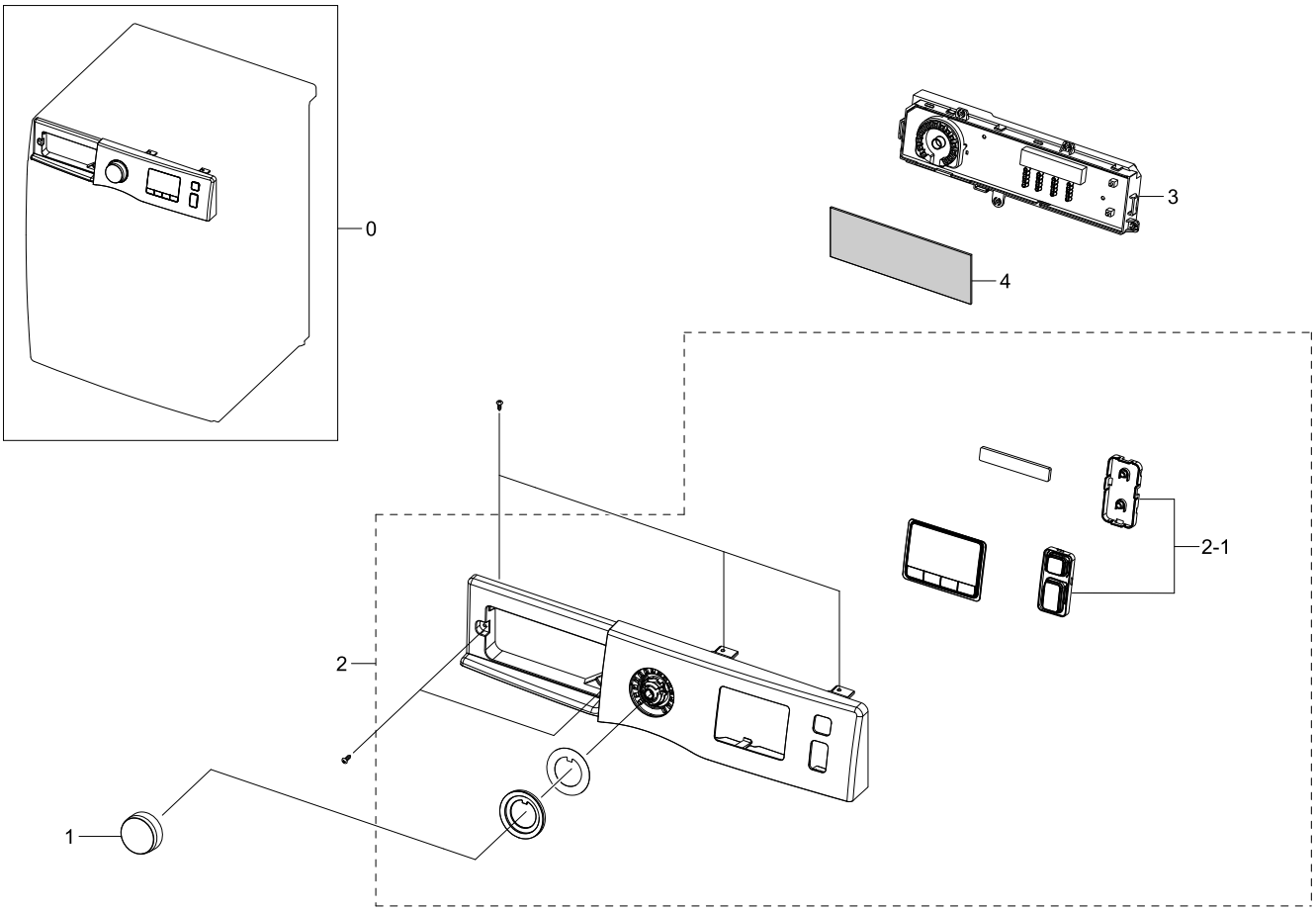

Parts List

No.	Lvl.	Loc.	Material Code	Description & Specification	SNA	Qty.
0	1	W0478	DC90-12865A	ASSY PANEL CONTROL; F500,WF80F5E0W4W/LE	SNA	1
1	2	W0475	DC97-17318B	ASSY KNOB ENCODER; WF80F50FU4W/EF	SA	1
2	2	W0478	DC97-17404J	ASSY PANEL CONTROL; WF80F5E0W4W/LE,ICON+E	SNA	1
2-1	3	G0431	DC97-17392A	ASSY BUTTON; WF80F50FU4W/EF	SNA	1
3	2		DC92-01690E	ASSY KIT; FWM_UNI,F500E,8KG, 1400RPM, BET	SA	1
4	2		DC63-01801A	SHEET PCB; DV80H4100CW,PC,-,V0,3022R,BLAC	SA	1

Copyright© 1995-2013 SAMSUNG. All rights reserved.

6. Assy Drawer

Exploded View

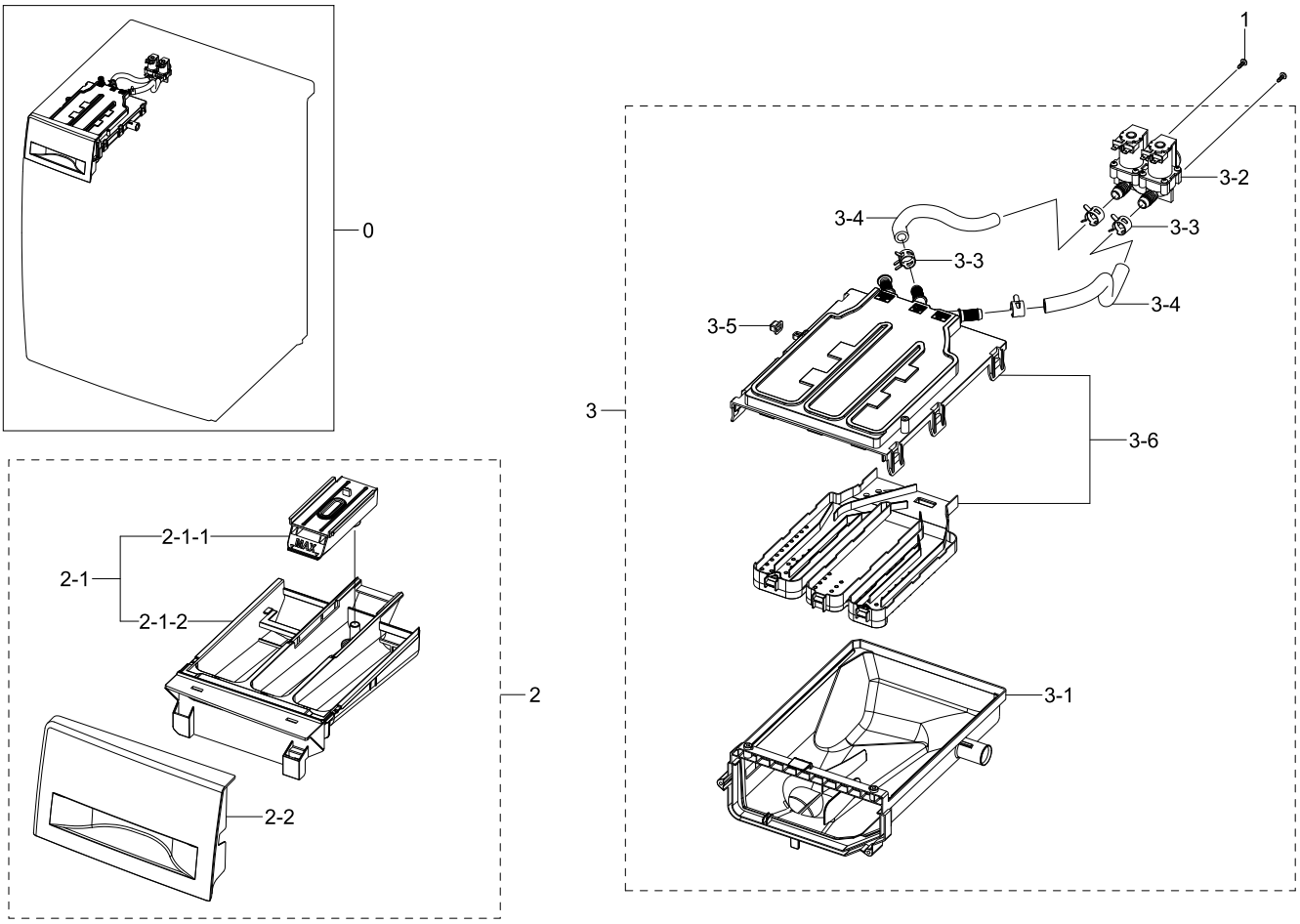

Parts List

No.	Lvl.	Loc.	Material Code	Description & Specification	SNA	Qty.
0	1	W0216	DC90-12798A	ASSY DRAWER; F500,UNI,WHT,COLD	SNA	1
1	2	F0055	6003-000226	SCREW-TAPTYPE; TH,+,-,S,M4,L8,ZPC(WHT),SW	SC	2
2	2	W0216	DC97-17310B	ASSY DRAWER; F500E,WF80F50FU4W	SA	1
2-1	3	W0216	DC97-19194A	ASSY DRAWER; F500E,Body Drawer+Cap Rinse	SNA	1
2-1-1	4	W0215	DC67-00669A	CAP RINSE; WF-F500E,PP,-,-,MT43,Honesty B	SA	1
2-1-2	4	W0156	DC61-03480A	BODY DRAWER; WF-F500E,PP,DA WHITE,WT0035,	SA	1
2-2	3		DC64-02858B	PANEL DRAWER; WF-F500E,ABS,-,HG-0760GP,DA	SA	1
3	2	W0163	DC97-17311A	ASSY HOUSING DRAWER; F500E,WF80F50FU4W,PP	SA	1
3-1	3	W0372	DC61-03473A	HOUSING DRAWER-LOW; WF-F500E,PP,-,WHITE,-	SA	1
3-2	3	W0078	DC62-00024M	VALVE WATER; AC220-240V,Bracket,1in 2out,	SC	1

Copyright© 1995-2013 SAMSUNG. All rights reserved.

No.	Lvl.	Loc.	Material Code	Description & Specification	SNA	Qty.
3-3	3	W0615	DC65-00008A	CLAMPER HOSE; SEW-DR605,SK5,-,ID14.2/T0.9	SA	4
3-4	3	W0151	DC67-00051T	HOSE DRAWER; F500E,EPDM,ID9.0,OD14.5,L230	SA	2
3-5	3		DC67-00327A	CAP DRAWER HOOK; HEBA-PJT,EPDM,T1.1,W13.9	SA	1
3-6	3	W0497	DC97-17347A	ASSY S.HOUSING DRAWER; F500E,WF80F5E5U4W	SA	1

Copyright© 1995-2013 SAMSUNG. All rights reserved.

7. Small Parts

Exploded View

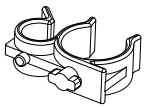	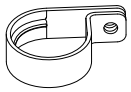			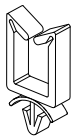
1	2	3	4	5
		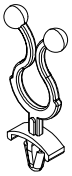		
6	7	8	9	

Parts List

No.	Lvl.	Loc.	Material Code	Description & Specification	SNA	Qty.
1	2	W0616	DC61-00133A	CLAMPER HOSE-FIX; P1291,PP,-,HOSE+PLUG,BJ	SA	1
2	2	W0616	DC61-00118A	CLAMP-CABLE; P1291,PA66,NATURAL,NC0001	SA	1
3	2	WI0293	DC61-40081A	HOLDER WIRE; DAWH-2NC,PA66,-,NATURAL,-	SA	3
4	2	W0623	DC61-40083A	HOLDER WIRE; DAWH-3ND,PA66,NTR(PI24.4)/NY	SA	1
5	2	M0001	DC61-00553B	CABLE CLAMP; DAWS-3NE,PA66,NTR	SA	6
6	2	WI0293	DC61-00995C	HOLDER WIRE; HEBA-PJT,PA,-,NATURAL,-,2110	SA	1
7	2		DC65-20010A	CABLE CLAMP; DA-9N-1,NYLON66,NTR	SNA	1
8	2		6502-000127	CABLE CLAMP; DAWH-18NB,PA66,NTR	SA	1
9	2	G0040	DC66-10003B	WIRE VINYL; SEW-100JL,PVC,,,,,,,,,T2.0*L1	SA	2

Copyright© 1995-2013 SAMSUNG. All rights reserved.