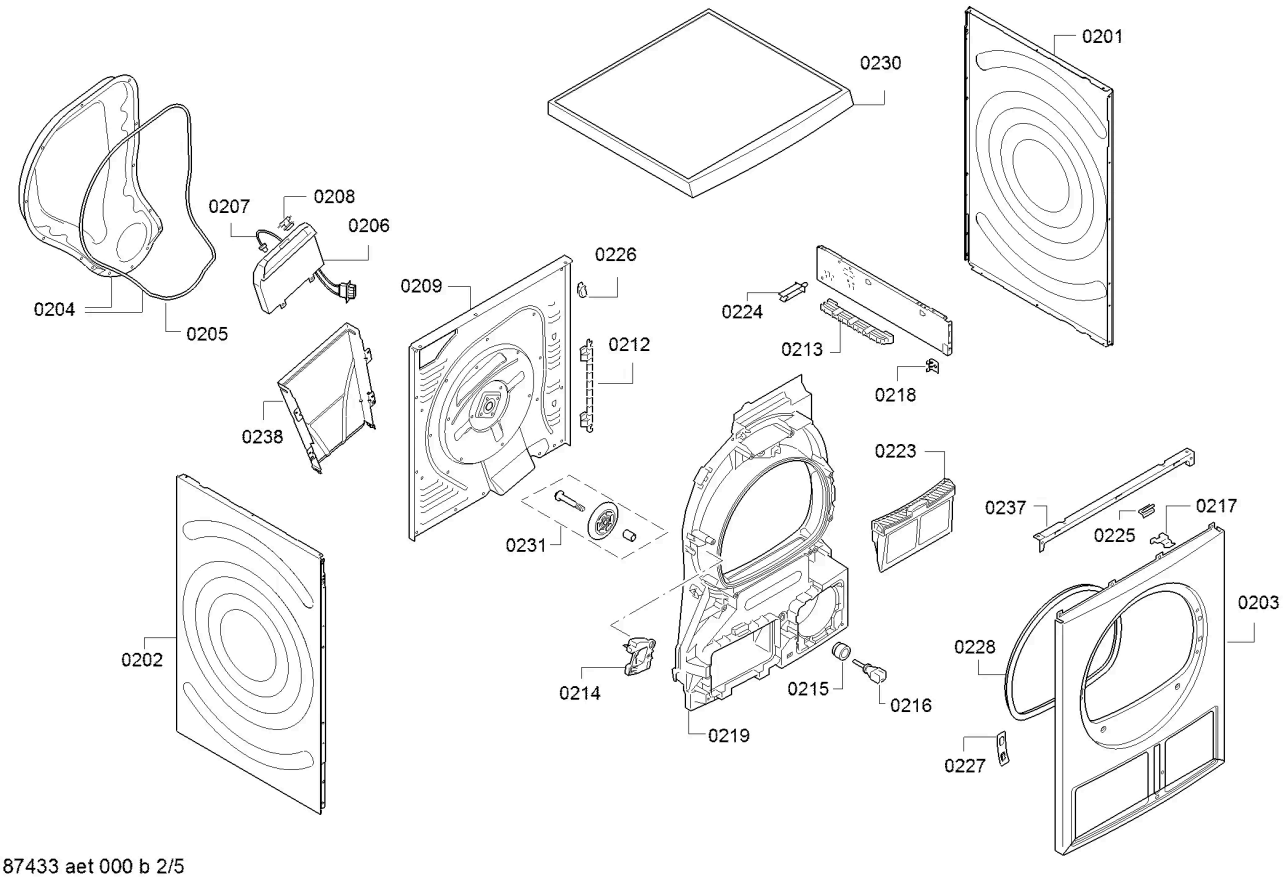

58300000187433 aet 000 b 2/5