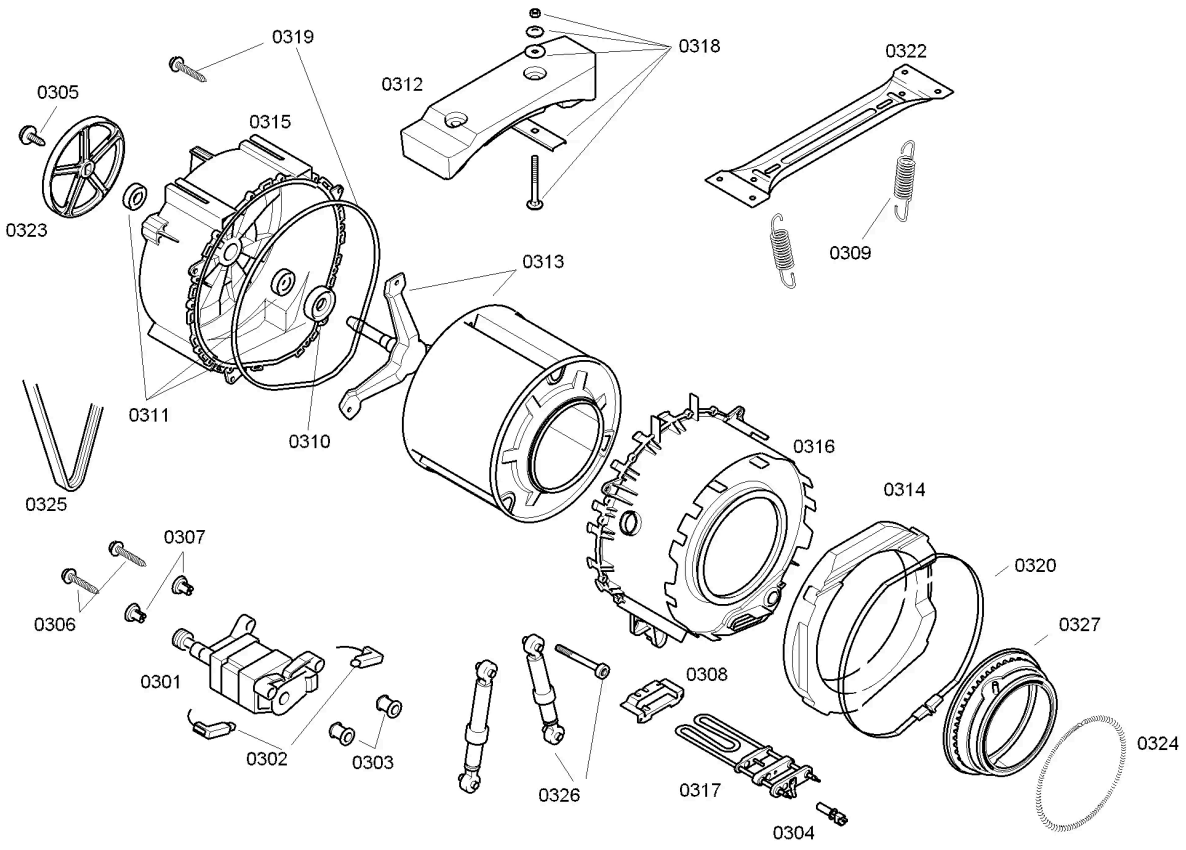

58300000182534 aet 000 a 3/4