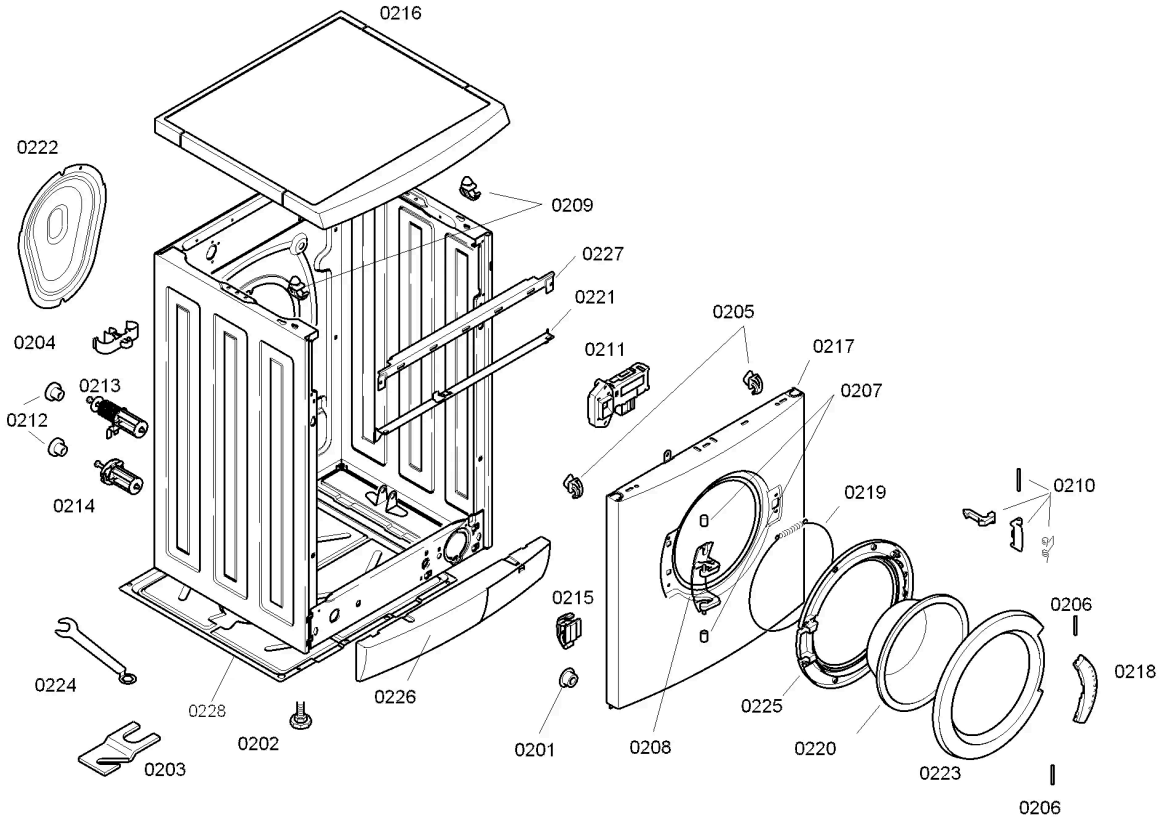

58300000182534 aet 000 a 2/4