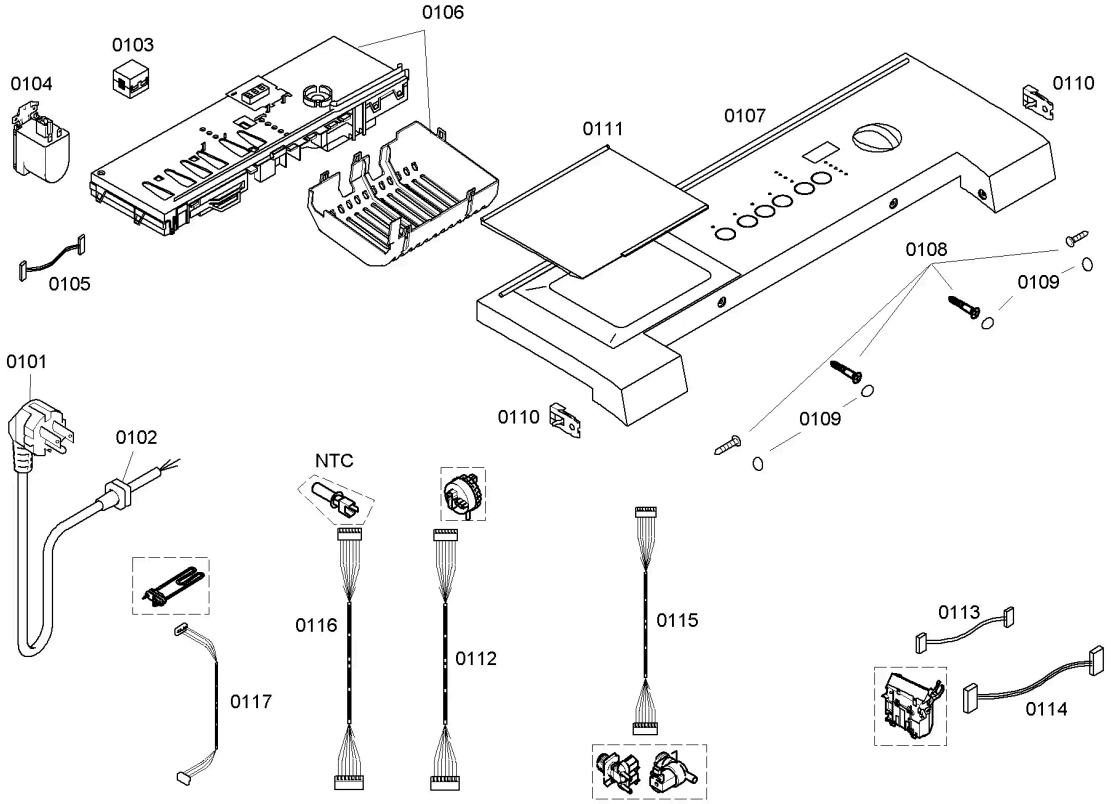

58300000111027 aet 000 b 1/4