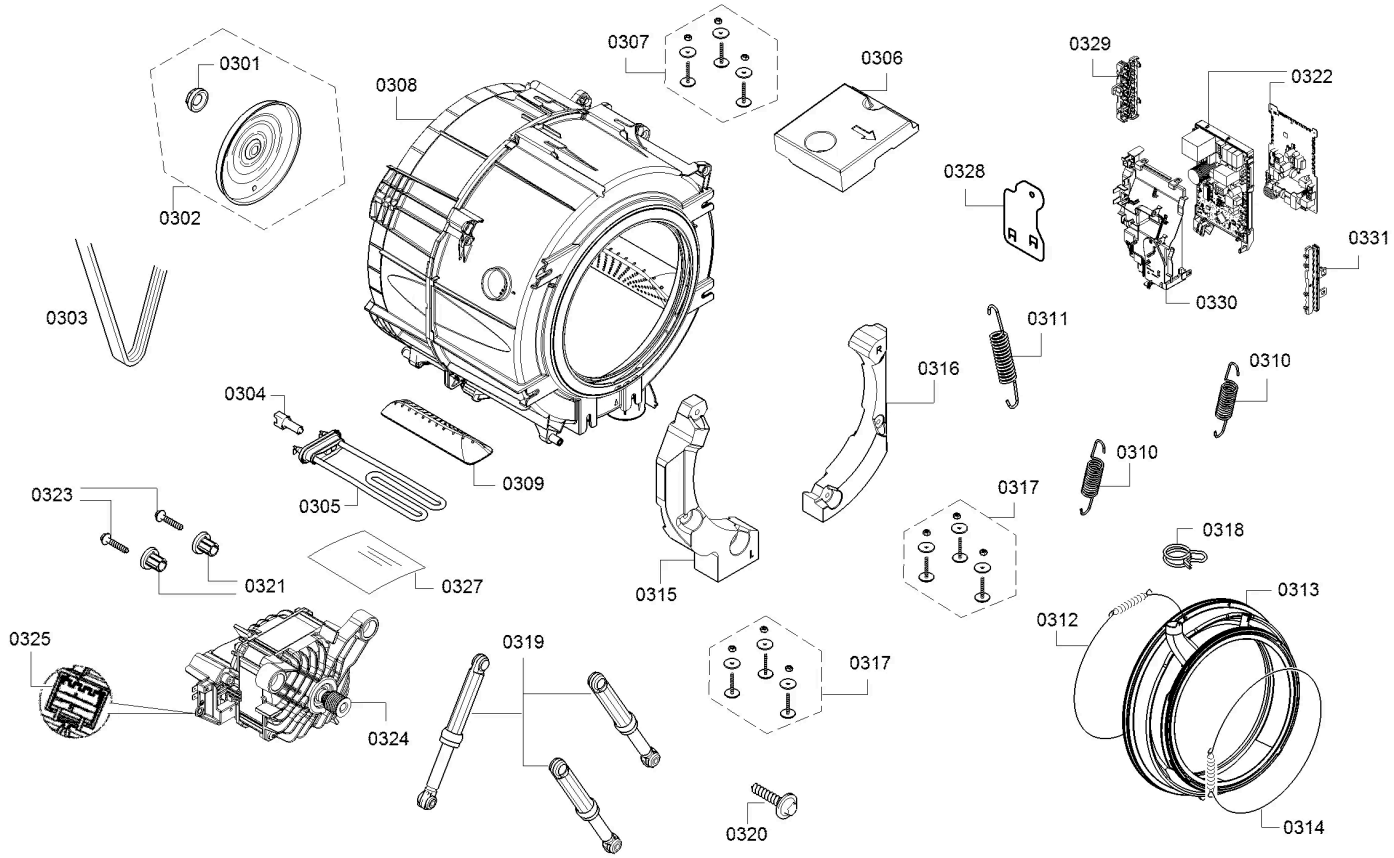

58300000240172 aet 003 a