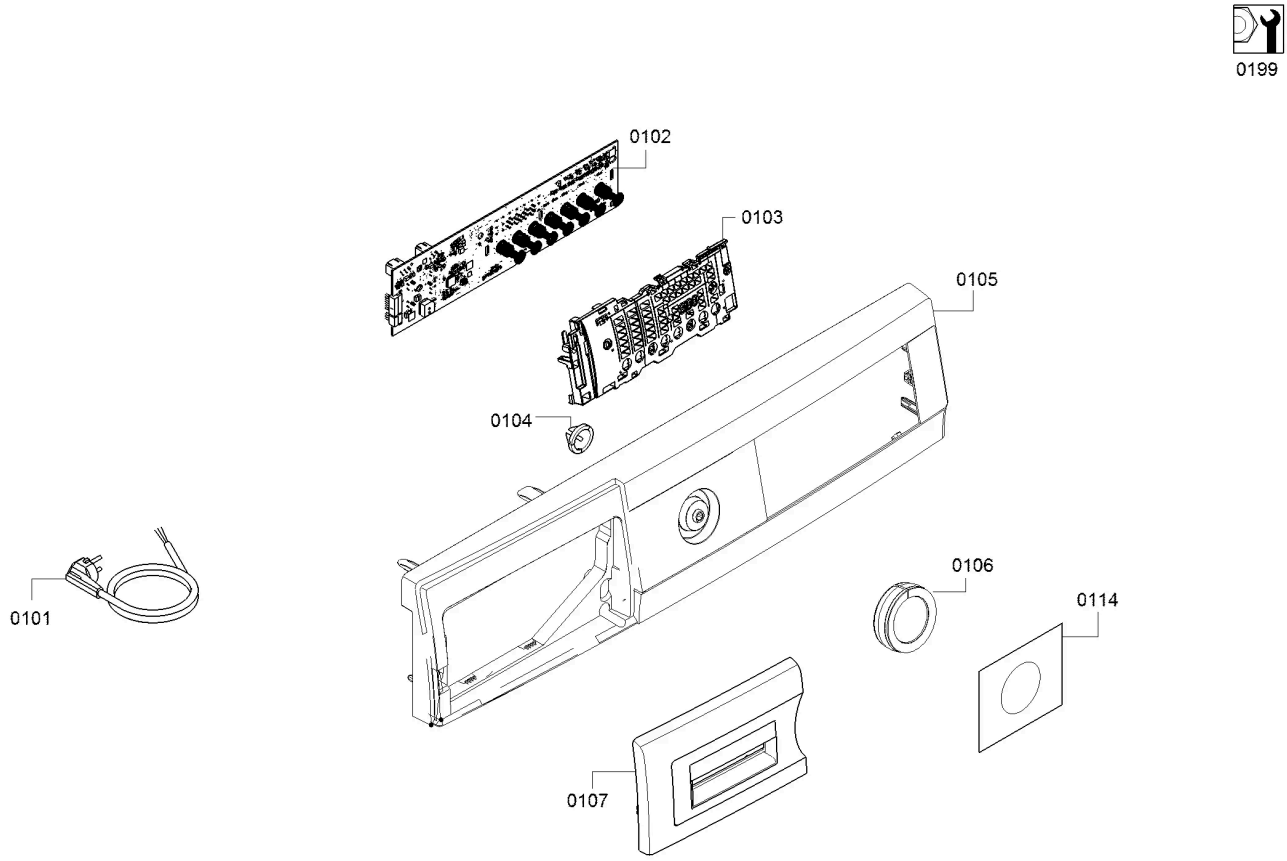

58300000239849 aet 001 a