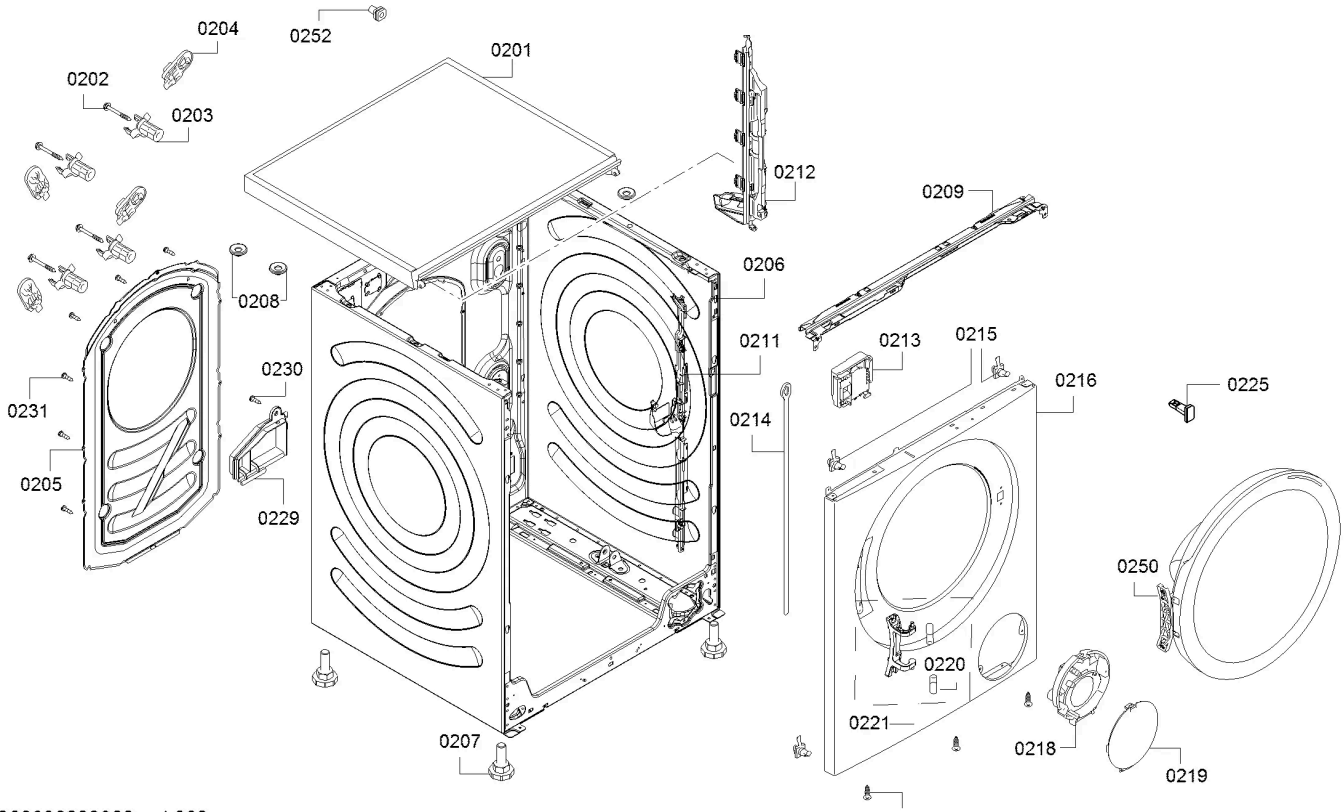

58300000238963 aet 002 a