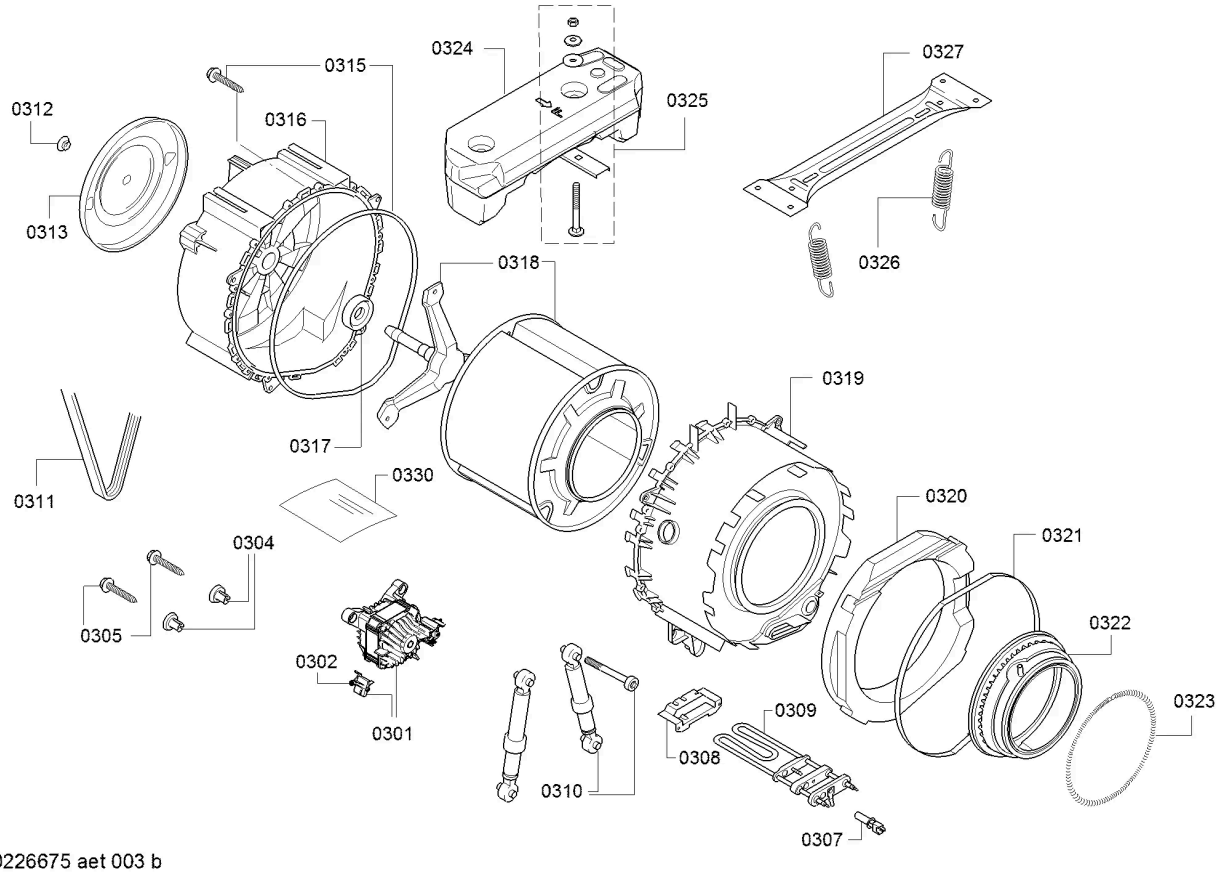

58300000226675 aet 003 b