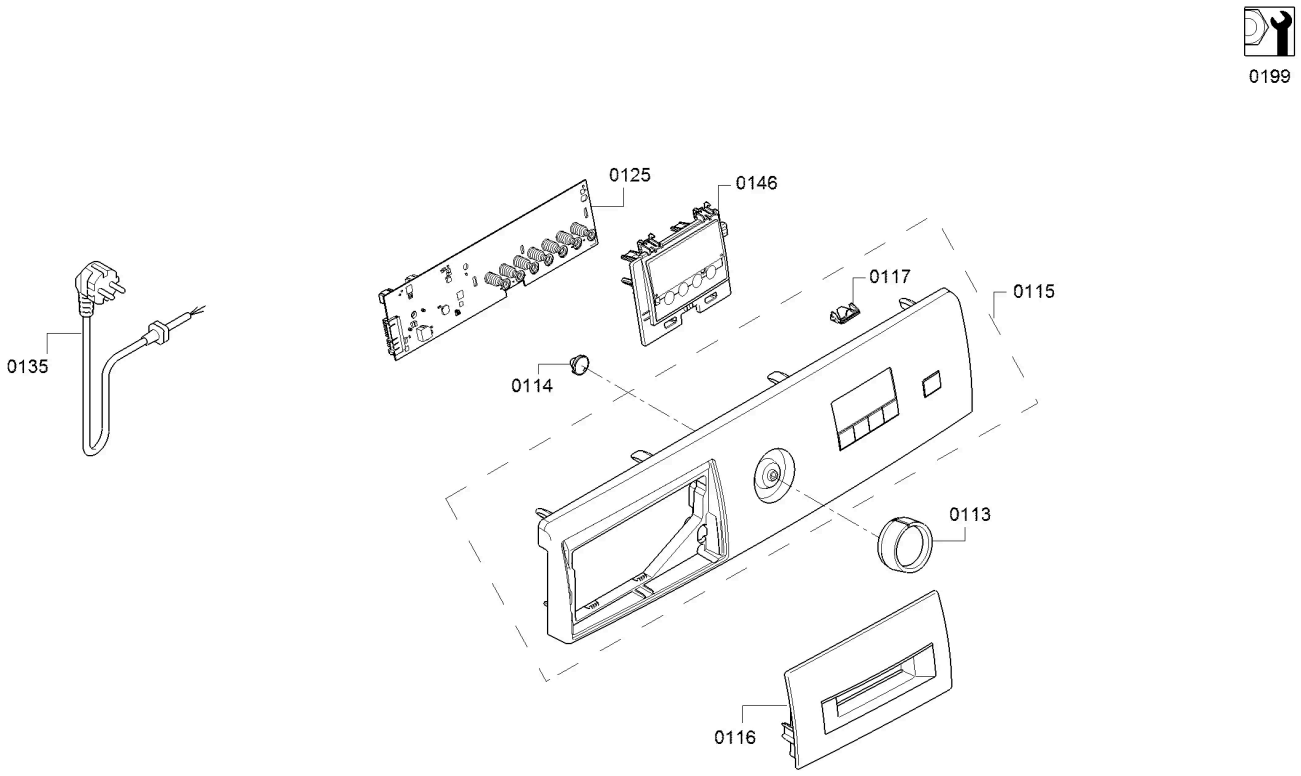

58300000220028 aet 001 a