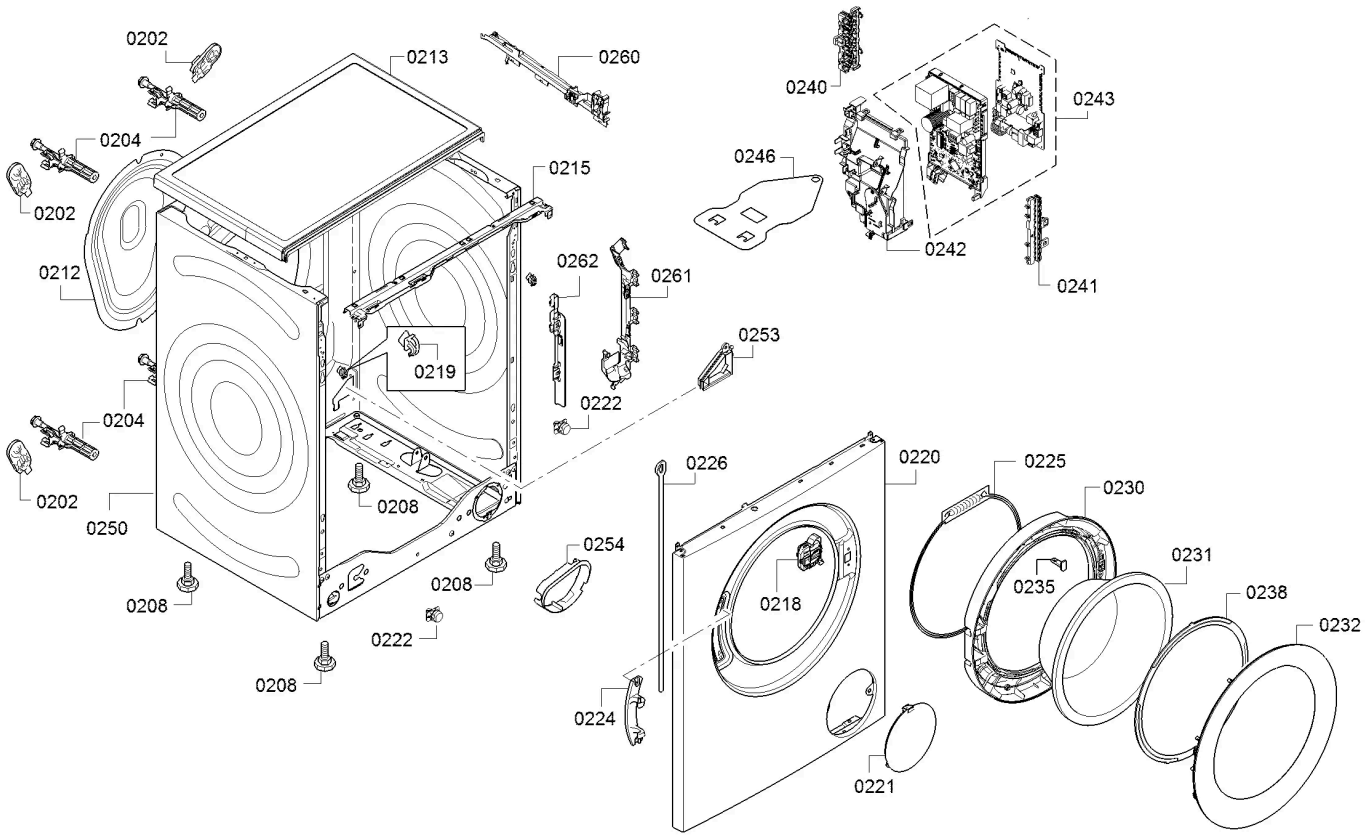

58300000232308 aet 002 a