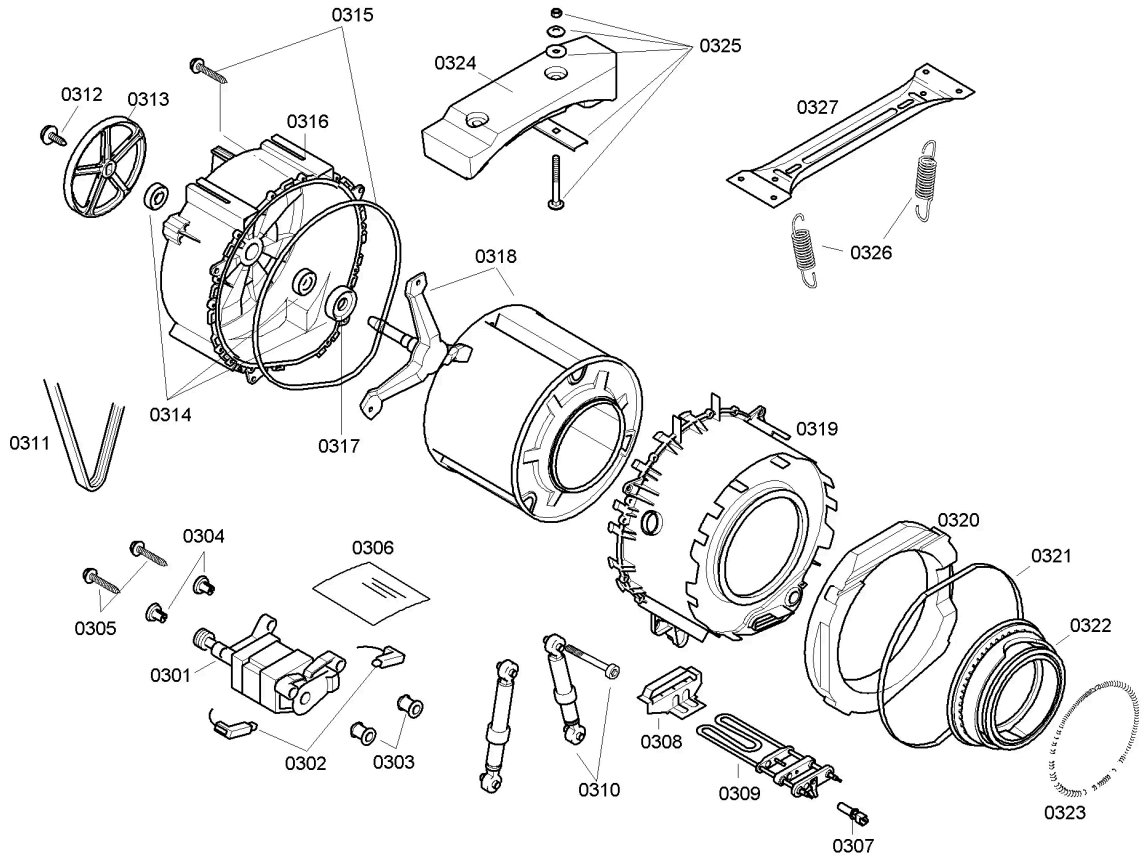

58300000153726 aet 000 a 3/4